American Fork Standards

Standards, Drawings & Specifications

Northern
ENGINEERING

GENERAL DEVELOPMENT REQUIREMENTS

This book contains general Construction standards and public improvement specifications for any work done or improvements installed and/or incorporated into all development projects within the boundaries of American Fork City. This document is intended to be utilized with the American Fork City Development Code in the preparation of development plans for American Fork City. To the degree that this document is found to conflict with the American Fork City Development Code, the stricter standard shall govern. All standards contained herein are intended to establish minimum requirements and are subject to the interpretation of the American Fork City Engineers and/or Public Works Director on a case by case basis. Developers, Designers, Engineers, Architects, and/or Contractors should thoroughly read and understand these standards and specifications before constructing public improvements.

ENGINEERING AND SURVEYING REQUIREMENTS

All engineering work in the development process in American Fork City must be done by or under the direction of a licensed professional engineer licensed to practice in the State of Utah. All surveying and platting of property must be done by or under the direction of a registered land surveyor licensed to practice in the State of Utah. All documents submitted for City review shall be stamped by said engineer or land surveyor.

Ordinance and Adoption

Ordinance No. 07-07-31

Title 0.1
Intent – Relationship to Development Code 0.2
Conflicts 0.3
Appeals 0.4
Violation 0.5
Severability 0.6
Enforcement – Remedies for Violation - Penalty 0.7
Adoption – Effective Date 0.8

Ordinance No. 2010-11-24 ..... Amendments
Ordinance No. 2011-06-17 ..... Amendments
Ordinance No. 2012-05-15 ..... Amendments

1.0 Design Standards

General Description 1.1
Streets 1.2
Easements 1.3
Water System 1.4
Fire Hydrants 1.5
Sewage System 1.6
Drainage System Plan 1.7
Signs 1.8
Lot Corners and Subdivision Monuments 1.9
Dedications 1.10

2.0 General Construction Requirements

General Description 2.1
Requests for Inspection 2.2
Construction Completion Inspection 2.3
Guarantee of Work 2.4
Building Permits 2.5
Barricades 2.6
Occupancy Permits 2.7

3.0 Earthwork

General Description 3.1
Excavation Permit Requirements 3.2
Clearing and Grubbing 3.3
Excavation for Structures 3.4
Backfill Around Structures 3.5
Construction of Embankments and Fills 3.6
Compacting Earth Materials 3.7
Slopes 3.8
Road Subgrade Preparation 3.9

4.0 Excavation and Backfill for Pipelines

General Description 4.1
Utility Coordination 4.2
Control of Groundwater 4.3
Excavation for Pipeline 4.4
Foundation Stabilization 4.5
Sheeting, Bracing, and Shoring of Excavations 4.6
Access to Trenches 4.7
Backfilling 4.8
Consolidation of Backfill 4.9
Compaction of Backfill (Top 4' of Trench) 4.10
Imported Select Backfill Material 4.11
Restoration of Construction Site 4.12

5.0 Restoration of Surface Improvements

General Description 5.1
Gravel Surface Repair 5.2
Asphalt Surface Repair 5.3
Concrete Surfaces 5.4
Irrigation Ditches 5.5

6.0 Sewer/Drainage Lines

General Description 6.1
Pipe Laying 6.2
Installation Requirements for Line and Grade 6.3
Sewer Grades 6.4
Reinforced Concrete Pipe 6.5
RCP Bell and Spigot Joints 6.5.1
RCP Pipe Installation 6.5.2
Gravel Foundation for RCP Pipe 6.5.3
RCP Pipe Bedding 6.5.4
PVC Plastic Pipe 6.6
PVC Fittings 6.6.1
PVC Pipe Installation 6.6.2
PVC Pipe Construction Loads 6.6.3
Gravel Foundation for PVC Pipe 6.6.4
PVC Pipe Embedment 6.6.5
Corrugated High Density Polyethylene Pipe (HDPE) 6.7
Scope 6.7.1
HDPE Pipe 6.7.2
HDPE Pipe Joints 6.7.3
HDPE Pipe Fittings 6.7.4
HDPE Pipe Installation 6.7.5
HDPE Pipe Construction Loads 6.7.6
Gravel Foundation for HDPE Pipe 6.7.7
HDPE Pipe Embedment 6.7.8

Corrugated Metal (CMP) Storm Sewer Pipe 6.8
CMP General Description.....6.8.1
CMP Material.....6.8.2
CMP Pipe 6.8.3
Handling and Assembly.....6.8.4
Installation.....6.8.5
Construction Loads 6.8.6
CMP Pipe Joints.....6.8.7
CMP Pipe Laying.....6.8.8
Gravel Foundation for CMP Pipe 6.8.9
CMP Pipe Bedding 6.8.10
Manhole Connections 6.8.11
Special Considerations.....6.8.12
Subsurface Drain Pipe.....6.9
General Requirements.....6.9.1
Material 6.9.2
Laying Pipe 6.9.3
Manholes.....6.10
General Requirements.....6.10.1
Foundation Preparation.....6.10.2
Bases 6.10.3
Wall and Cone Sections 6.10.4
Pipe Connections 6.10.5
Backfill.....6.10.6
Covers and Frames.....6.10.7
Manhole Steps.....6.10.8
Cleaning and Testing Sanitary Sewer Lines 6.11
Cleaning 6.11.1
Displacement Test.....6.11.2
Exfiltration Test 6.11.3
Infiltration Test 6.11.4
Deflection Testing Flexible Sewer and Storm Drain Lines 6.12
"Go/No-Go" Mandrel Proof Testing 6.12.1

7.0 Sewer and Water Lateral and Service Line Installation
General Description 7.1
Excavation.....7.2
General Requirements.....7.2.1
Sidewalk, Curb and Gutter.....7.2.2
Sewer Lateral Connections 7.3
Pipe Bedding.....7.3.1
Backfill.....7.3.2
Construction Proceedings 7.3.3
Cover Over Sewer Lateral Lines.....7.3.4
Sewer Clean Outs.....7.3.5
Culinary Service Lateral Connections 7.4

Meter Setters, Box and Cover 7.4.1
Flared Joints 7.4.2
Copper Tubing to Screw Pipe Joints 7.4.3
Compression Fittings 7.4.4
Solder and Sweat Joints 7.4.5
Connection to Main 7.4.6
Separation 7.5
Separation Between Sewer and Water Service Lines 7.5.1
Stop-and-Waste Tee and Valve 7.5.2
Water Service Lateral to Main Line 7.5.3
Secondary Water Service Lateral Connection 7.6
Service Saddle Specification 7.6.1
Polyethylene Tubing 7.6.2
Compression Connections – At Service Saddle 7.6.3
Service Fittings 7.6.4
Ball Straight Service Valve 7.6.5
City Service Box 7.6.6
PVC Pipe Extensions 7.6.7
Hose Bib 7.6.8
Location of Stub Pipes 7.6.9
Service Pipe Installation 7.6.10

8.0 Storm Water Pre-Treatment Sumps
General Description 8.1
Storm Water Pre-Treatment Sump 8.2

9.0 Water Lines
General Description 9.1
Concrete Thrust Blocking 9.2
Pipe Laying 9.3
Ductile Iron Pipe 9.4
General Requirements 9.4.1
Materials 9.4.2
Joints 9.4.3
Fittings 9.4.4
Lining and Coating 9.4.5
Corrosion Protection and Soil Tests 9.4.6
Polyethylene Encasement 9.4.7
Pipe Installation 9.4.8
Gravel Foundation for Pipe Used 9.4.9
Pipe Bedding 9.4.10
Cleaning and Flushing 9.4.11
PVC Pipe and Tubing 9.5
General Requirements 9.5.1
Materials 9.5.2
Joints 9.5.3

Fittings 9.5.4
Locator Wire and Warning Tape 9.5.5
Pipe Installation 9.5.6
Gravel Foundation for Pipe Used 9.5.7
Pipe Bedding 9.5.8
Cleaning and Flushing 9.5.9
Line of Grade 9.5.10
Valves 9.6
Gate Valves 9.6.1
Butterfly Valves 9.6.2
Valve Boxes 9.6.3
Fire Hydrants 9.7
General Requirements 9.7.1
Hydrant Details 9.7.2
Auxiliary Valve 9.7.3
Valve Boxes 9.7.4
Hydrant Installation 9.7.5
Backflow Prevention Devices 9.8
Culinary Water Line Construction Near Sewer or Wastewater Lines 9.9
Water/Sewer Line Horizontal Separation 9.9.1
Exception to Horizontal Separation 9.9.2
Culinary Water/Sewer Line Crossings 9.9.3
Inability to Provide Vertical Separation 9.9.4
Testing Water Lines 9.10
General Requirements 9.10.1
Testing 9.10.2
Flushing 9.10.3
Disinfection of Culinary Water Lines 9.11
General Requirements 9.11.1
Chlorination 9.11.2

10.0 Irrigation Systems and Landscaping
Irrigation Systems – General Description 10.1
General Requirements 10.2
Ordinances and Regulations 10.2.1
Bonding and Inspection 10.2.2
Materials 10.2.3
Inspections and Procedures 10.2.4
Record Drawings 10.2.5
Excavation and Backfill 10.3
Pipe and Tube 10.4
General Requirements 10.4.1
Plastic Pipe and Tubing 10.4.2
Plastic Pipe Fittings and Connections 10.4.3
Flushing and Testing 10.4.4
Wiring 10.4.5

Irrigation Heads, Gate Valves and Quick Couplers 10.5
Irrigation Heads 10.5.1
Gate Valves 10.5.2
Quick Coupling Valves 10.5.3
Drip Irrigation 10.5.4
Quick Coupling Valve Keys 10.5.5
Irrigation Risers 10.5.6
Irrigation Controller 10.6
Electric Remote-Control Valves 10.7
Connection 10.8
Connection Fee 10.8.1
Connection to Main Line 10.8.2
Backflow Prevention 10.8.3
Backflow Requirements, Inspections, and Tests 10.8.4
Location of Backflow Prevention 10.8.5
Double Check Valve Assembly (DCA) 10.8.6
Reduced Pressure Assembly (RP) 10.8.7
Planting Specifications 10.9
Landscaping – Scope of Work 10.10
Drawings and Specifications 10.11
Obstructions Below Ground 10.12
Spacing 10.13
Plants to be Furnished 10.14
Substitutions 10.15
Finish Grading and Soil Preparation 10.16
Planting 10.17
Ground Cover 10.18
Trees and Shrubs 10.19
Staking 10.20
Maintenance 10.21
Inspections and Procedures 10.22

11.0 Installation of Utility Conduits
General Description 11.1
Excavation 11.2
Conduit Pipe 11.3

12.0 Portland Cement Concrete
General Description 12.1
Materials 12.2
Portland Cement 12.2.1
Water 12.2.2
Air-Entraining Admixtures 12.2.3
Use of Calcium Chloride 12.2.4
Fly Ash or Other Pozzolans 12.2.5
Curing Compound 12.2.6

Preformed Expansion Joint Filler 12.2.7
Aggregates 12.2.8
Metal Reinforcement and Embedded Item 12.2.9
Storage of Materials 12.2.10
Strength Requirements 12.3
Required Average Strength 12.3.1
Rejection of Concrete on the Basis of Strength 12.3.2
Strength Test Procedures 12.3.3
Air Content and Consistency 12.4
Air-Entrainment 12.4.1
Consistency 12.4.2
Rejection of Concrete Due to Inconsistency or Air Entraining 12.4.3
Design of Concrete Mix 12.5
Inspection and Testing 12.6
Handling and Measurement of Materials 12.7
Cement 12.7.1
Aggregate 12.7.2
Water 12.7.3
Admixtures 12.7.4
Mixers and Mixing 12.8
Forms 12.9
Conveying Concrete 12.10
Placing 12.11
Joints 12.12
Construction Joints for Structures 12.12.1
Expansion and Construction Joints for Structures 12.12.2
Construction Joints for Sidewalks 12.12.3
Construction Joints for Curb and Gutter 12.12.4
Water Stops 12.13
Finishing Formed Surfaces 12.14
Finishing Uniformed Surfaces 12.15
Curing 12.16
Removal or Repair 12.17
Concrete in Cold Weather 12.18
Concrete in Hot Weather 12.19

13.0 Asphalt Paving
General Description 13.1
Road Subgrade Preparation 13.2
Base Course 13.3
Bituminous Surface Course 13.4
Construction Methods and Equipment 13.5
Spreading and Compaction 13.6
Bituminous Plant Mix Seal Coat 13.7
Weather Limitations 13.8
Flagging 13.9

14.0 Fencing Specifications

General Description 14.1
Chain Link Fence Specifications 14.2
Materials 14.2.1
Concrete 14.2.2
Construction Methods 14.2.3
Wood Fence Specifications 14.3
Materials 14.3.1
Concrete 14.3.2
Construction Methods 14.3.3

15.0 Detailed Drawings

Type B1 C&G, reverse Lip C&G, Valley Gutter 15.1
Catch Basin 15.2
Typical Waterman Taps 15.3
Typical Secondary Water Main Tap 15.3A
Valve Box Detail 15.4
Secondary Water Valve Box Detail 15.4A
Culinary Water Service Connection 15.5
Single/Double Service Connection for Secondary Water 15.5A
Large Service Connection for Secondary Water 15.5B
Fire Hydrant 15.6
Cul-De-Sac 15.7
Intersection Radius Rebar Detail 15.8
Flared Drive Approach With Planter 15.9
Flared Drive Approach Without Planter 15.10
Sanitary Sewer Drop Manhole Detail 15.11
Sanitary Sewer Line Manhole Detail 15.12
Sanitary Sewer Junction Manhole Detail 15.13
Pre-Treatment Manhole And Sump 15.14
Sewer Cleanout Sewer Pipe Installation 15.15
Local Minor Collector 15.16
Local Minor Collector 15.16A
Major Collector Arterial 15.17
Major Collector Arterial 15.17A
Sidewalk Ramp 15.18
Standard Sewer Service Line 15.19
Standard Street Intersection And Utility Location 15.20
Standard Street Intersection and Utility Location 15.20A
Waterline Thrust Blocking 15.21
Typical Trench Detail 15.22
Typical Secondary Water Trench Detail 15.22A
Sanitary Sewer Lateral and Clean-Out 15.23
Standard Street Intersection Corner 15.24
Deciduous Tree Planting Detail 15.25

Evergreen Tree Planting Detail.....15.26
Shrub Planting Detail.....15.27
Monument Cap and Base Type "A" 15.28
Street Monument Type "B" 15.29
Fencing Ordinance.....15.30
Secondary Water Details.....15.31
Air Inlet and Removal Facility for Secondary Water 15.32
Locator Wire Detail 15.33
Secondary Water Sump Details 15.34
Air Release Station Detail.....15.35
Gate-Controlled Driveway Access 15.38A
Private Roadways.....15.39A
Public Trail Cross-Sections..... 15.40A through H
Sight Triangle.....15.41
Off-Line Oil/Water/Sediment Separator.....15.42

16.0 Recommended Access Management Requirements

American Fork City Access Management Manual – April 2012

Supplementary Standards

American Public Works Association – Utah Chapter

American Association of Highway and Transportation Officials (AASHTO)
- A Policy on Geometric Design of Highways and Streets, including the low volume (under 400 ADT) standard
- Bridge Design and Construction Standards
- Roadside Design Guide

Manual on Uniform Traffic Control Devices (MUTCD)

American Fork City Access Management Manual as prepared by Hales Engineering dated April 2012

ORDINANCE NO 07-07-31

AN ORDINANCE ESTABLISHING MINIMUM STANDARDS FOR THE DESIGN, QUALITY OF MATERIALS AND, CONSTRUCTION OF PUBLIC IMPROVEMENTS WITHIN THE CITY OF AMERICAN FORK, UTAH.

BE IT ORDAINED BY THE CITY COUNCIL OF AMERICAN FORK, UTAH:

SECTION 0

GENERAL PROVISIONS

0.1 TITLE

This Ordinance shall be entitled, and known as, THE DEVELOPMENT AND CONSTRUCTION STANDARDS OF AMERICAN FORK, UTAH, and may be so cited and pleaded.

0.2 INTENT - RELATIONSHIP TO DEVELOPMENT CODE

1. It is the intent of the City Council, through the adoption of this Ordinance, to establish minimum standards for the design, construction and quality of public improvements and certain essential private improvements constructed as a part of a subdivision, large scale development, utility extension or similar project within the City.

2. This document, as may from time to time be amended, shall constitute those certain City Standards referred to in the Development Code of American Fork, City, Utah, Sections 3-4, 3-5 and 3-8.1 (relating to Subdivision), Section 2-6.2-N (relating to Large Scale Developments), Section 4-2.1 (relating to extension of water and sewer mains), and similar provisions of the Development Code requiring construction in accordance with City Standards.

Sanitary Sewer Lateral and Clean-Out	15.23
Standard Street Intersection Corner	15.24
Deciduous Tree Planting Detail	15.25
Evergreen Tree Planting Detail	15.26
Shrub Planting Detail	15.27
Monument Cap and Base Type "A"	15.28
Street Monument Type "B"	15.29
Fencing Ordinance	15.30
Secondary Water Drainage Details	15.31
Air Inlet and Removal Facility for Secondary Water	15.32
Locator Wire Detail	15.33

0.3 CONFLICTS

Wherever the terms of this Ordinance, and the specific standards and specifications adopted hereunder, shall conflict with the terms of any other application regulation, the more stringent shall apply, unless relief therefrom shall have been granted by the City Engineer or City Council, as applicable.

0.4 APPEALS

Appeals from the strict terms of this Ordinance and the specific standards and specifications adopted hereunder may be granted by action of the City Engineer upon a finding by the Engineer that:

1. The standard or requirement appealed from is unnecessary in order to maintain the integrity of the system or facility and the safety of the public, and

2. The appeal may be granted without significant negative impact on the intent of the standard and will not require future remedial action by the City or any adjacent development.

0.5 VIOLATION

1. It shall be unlawful for any person to violate any of the provisions of this ordinance. Any person, firm, or corporation or any agent thereof who shall fail to comply with any of the provisions of this Ordinance or who knowingly makes false statements, representations or certifications in any application or document filed or required to be maintained under this Ordinance shall be guilty of a violation of this Ordinance.

2. Whenever it becomes necessary to enter actions in the court in order to obtain compliance with one or more provisions of this Ordinance, the City Engineer shall first refer such matters to the City Council and to the City Attorney for their action and shall thereafter follow the instructions of the City Council with respect thereto.

0.6 SEVERABILITY

This Ordinance and the various parts, sections, and clauses are hereby declared to be severable. If any part, section, paragraph, sentence, clause, or phrase is adjudged unconstitutional or invalid, it is hereby declared that the remainder of this Ordinance shall not be affected thereby.

0.7 ENFORCEMENT - REMEDIES FOR VIOLATION - PENALTY

1. Withholding Building Permits
   In addition to all other remedies, the City may enforce the provisions of this Ordinance by withholding approval of a final plat of a subdivision or similar development project or the withholding of building, grading, and excavation permits, and certificates of occupancy, as applicable.

2. Injunction, Mandamus, Abatement
   The City Council, Zoning Administrator, City Engineer and/or City Attorney may, in addition to other remedies provided by law, institute injunction, mandamus, abatement or any other appropriate action or proceeding to prevent, enjoin, abate or remove any unlawful building use or act.

3. Penalties
   In addition to being subject to injunctive or abatement actions under this Ordinance, violation of this Code or any regulation, order or permit adopted or issued under this Code shall, upon conviction, be punishable either:

   A. By imposition of a civil penalty not to exceed $1,000 per violation per day, to be collected in a civil action (UCA 10-9-1003(2)(b)); or

   B. As a class C misdemeanor, as defined and established by State Law. (See UCA 76-3-101 et.seq.)

0.8 ADOPTION - EFFECTIVE DATE

This Ordinance shall take effect immediately upon its passage and publication, as required by law.

PASSED AND ORDERED PUBLISHED BY THE CITY COUNCIL OF AMERICAN FORK CITY, UTAH, THIS 10 DAY OF July, 2007.

Mayor

ATTEST:

City Recorder

AMERICAN FORK CITY CORPORATE SEAL UTAH COUNTY STATE OF UTAH

ORDINANCE NO. 2010-11-24

AN ORDINANCE AMENDING CHAPTER FIFTEEN (DESIGN DRAWINGS) OF THAT CERTAIN ORDINANCE ENTITLED "DEVELOPMENT AND CONSTRUCTION STANDARDS OF AMERICAN FORK, UTAH", WHICH ORDINANCE SETS FORTH THE MINIMUM STANDARDS FOR THE DESIGN, QUALITY OF MATERIALS AND CONSTRUCTION OF PUBLIC IMPROVEMENTS WITHIN THE CITY; ADDING ADDITIONAL STANDARD DRAWINGS RELATING TO: (1) PRIVATE STREETS, (2) ENTRY ROADS FOR GATED DEVELOPMENTS AND (3) CROSS-SECTIONS FOR PUBLIC TRAILS; AND PROVIDING FOR THE ENFORCEMENT OF THE AMENDMENTS.

BE IT ORDAINED BY THE CITY COUNCIL OF AMERICAN FORK, UTAH:

PART I
TEXT OF ORDINANCE

SECTION 1. Section 15 of The Development and Construction Standards of American Fork, Utah, entitled Detail Drawings, is hereby amended by adding the following as standard detail drawings applicable within American Fork, City. The specific Detail Drawing applicable to each shall be as set forth in Attachment A to this Ordinance.

Typical Secondary Water Main Tap	15.3 A
Secondary Water Valve Box Detail	15.4 A
Single/Double Service Connection for Secondary Water	15.5 A
Large Service Connection for Secondary Water	15.5B
Local Minor Collector	15.16 A
Major Collector Arterial	15.17 A
Standard Street Intersection and Utility Location	15.20 A
Typical Secondary Water Trench Detail	15.22 A
Secondary Water Details	15.31
Air Inlet and Removal Facility for Secondary Water	15.32
Locator Wire Detail	15.33
Secondary Water Sump Details	15.34
Gate-Controlled Driveway Access	15.38 A

Private Roadways	15.39 A
Public Trail Cross-Sections	15.40 A through H

SECTION 2. Section 6, 7, and 9 of The Development and Construction Standards of American Fork, Utah, is hereby amended by replacing the previously adopted text with the text attached in the previously noted Attachment A. These standards shall replace previously adopted sections as noted by the same designation.

SECTION 3. The Development and Construction Standards of American Fork, Utah, is hereby amended by adding the following reference standards as supplemental standards applicable within American Fork, City. These standards shall apply and govern where specific American Fork City Development and Construction Standards do not address a given item. Adopted standard shall be the latest version of the indicated item.

American Public Works Association - Utah Chapter
American Association of Highway and Transportation Officials (AASHTO)
- A Policy on Geometric Design of Highways and Streets, including the low volume (under 400 ADT) standard.
- Bridge Design and Construction Standards
- Roadside Design Guide

Manual on Uniform Traffic Control Devices (MUTCD)

PART II
PENALTY AND ADOPTION

SECTION 1. - Conflicting Provisions. Whenever any detail drawing adopted by this of this Ordinance conflict with the provisions of any other detail drawing previously adopted by ordinance or resolution, the terms set forth in the detail drawing adopted by this Ordinance shall prevail.

SECTION 2 - Amendment to be Added to Development and Construction Standards. The City Council hereby authorizes and directs that insert pages reflecting the provisions enacted hereby shall be made and placed in the Official copies of the Development and Construction standards in the office of the City Recorder.

SECTION 3 - Penalty. Hereafter these amendments shall be construed as part of the Development and Construction Standards Ordinance of American Fork City, Utah, to the same effect as if originally a part thereof, and all relevant provisions of said Ordinance shall be applicable thereto, including, but not limited to, the enforcement, violation and penalty provisions thereof..

PASSED AND ORDERED PUBLISHED BY THE CITY COUNCIL OF AMERICAN FORK CITY, UTAH, THIS 23 DAY OF NOVEMBER, 2010.

James H. Hadfield, Mayor

ATTEST:

Richard M. Colborn, City Recorder

ORDINANCE NO. 2011-06-17

AN ORDINANCE AMENDING THAT CERTAIN ORDINANCE ENTITLED "DEVELOPMENT AND CONSTRUCTION STANDARDS OF AMERICAN FORK, UTAH", WHICH ORDINANCE SETS FORTH THE MINIMUM STANDARDS FOR THE DESIGN, QUALITY OF MATERIALS AND CONSTRUCTION OF PUBLIC IMPROVEMENTS WITHIN THE CITY;

BE IT ORDAINED BY THE CITY COUNCIL OF AMERICAN FORK, UTAH:

PART I
TEXT OF ORDINANCE

SECTION 1. The Development and Construction Standards of American Fork, Utah, is hereby amended by modifying or adding to the previously adopted text with the following text.

Sections:
6.5.2 RCP PIPE INSTALLATION
6.6.2 PVC PIPE INSTALLATION
6.7.3 HDPE PIPE INSTALLATION
6.8.5 INSTALLATION

Each section shall be modified in pipe installation category to add the following paragraph as follows:

Where pipe product is provided with a joint system intended to allow for segmental installation of piping materials, joints shall be closed tightly such that gasket system is fully engaged and no more than 1/2-inch of gap section between overlapping joint material (bell and spigot or another approved method) is visible via a televised inspection methods. Contractor shall meet with City designated inspection representative prior any construction commencing to review City standards relative to installation of piping system.

1.3 EASEMENTS

Add sentence:

Sewer or storm drainage lines which are deeper than 5-feet to flowline shall be placed in a minimum of a 25-foot wide easement. Sewer lines which are deeper than 12-feet or greater than 12-inches in diameter shall be placed in a 30-foot wide easement or greater as determined by City Engineer.

1.7 DRAINAGE SYSTEM PLAN
Paragraphs to be added to end of the section as follows:

In addition to the standards stated herein, all design and construction of storm drainage systems shall comply with the latest version of the American Fork Storm Water Technical Manual, American Fork City Storm Water Management Program manual, American Fork City Storm Drain Element of the General Plan, and any other associated or applicable storm water management manuals or ordinance as adopted by American Fork City

Roof Drainage Systems:
Commercial and Multi-Family Applications: Roof drainage systems shall be designed such that all run-off from primary collection roof drains shall be routed to the underground storm water management system without creating a collected flow condition either across sidewalks or parking lot pavement systems. In all cases, roof drainage systems shall be designed in accordance with the adopted City Building Codes.

Roof drain retention systems are acceptable provided that they comply with all grading provisions of the adopted City Building Code and are sized to contain the 100-year design event with no percolation used for calculation purposes to account for frozen conditions in American Fork City's winter climate. Roof drain retention systems are not allowed in sensitive lands areas of the City as defined by the City Sensitive Land Ordinance.

Single Family Residential Applications: Roof drainage systems shall be constructed in accordance with the adopted City Building Codes. These systems shall be installed to prevent collected flow conditions on sidewalks or driveways and shall not discharge onto the adjacent property. Generally, roof drainage shall be either discharged to an approved street drainage system or retained on site and are sized to contain the 100-year design event with no percolation used for calculation purposes to account for frozen conditions in American Fork City's winter climate. Roof drain retention systems are not allowed in sensitive lands areas of the City as defined by the City Sensitive Land Ordinance.

General Property Drainage:
American Fork City code prohibits the discharge of storm waters onto an adjacent site. Where minor off-site or off-property landscape sheet-flow storm drainage discharge occurs, drainage systems shall comply with the laws of the State of Utah regarding off-site discharge of water. Applicant shall prove compliance with applicable laws where such drainage is proposed to occur. Substantial or any type collected drainage is prohibited from leaving a given site outside of an approved storm drainage management and discharge system.

Add 1.11 DUMPSTER/TRASH ENCLOSURE
Dumpster/Trash Enclosures shall be constructed per the approved City standard detail. Unless a given site is specifically exempted by the Land Use Authority for a given zone, every commercial or multi-family site shall include a minimum of one enclosure(s) or more as appropriate in number to the uses proposed. Where a given use is for a food, automotive or similar parts store, automotive repair, or similar greasy waste or discharge use, the dumpster enclosure shall include a frost-free culinary water spigot and a discharge drain which flows through a grease trap prior to discharge to a City sanitary sewer facility. In such cases, site shall be graded such that only discharge from the enclosure shall be allowed into the sewer system. Dumpster enclosures with connections to the sanitary sewer system shall either contain a roof system to prevent storm drainage from passing to the sanitary sewer or site shall be billed by the City monthly as a part of the City utility bill for the average annual treatment cost of the drainage into the sewer system at the City standard rate per gallon.

2 .7 OCCUPANCY PERMITS

Paragraph to be added

Sites requesting temporary occupancy permit in excess of a single two-week period shall provide the City a Performance Guarantee per the provisions of the Development Code in the estimated amount of the work to be completed as approved by City Chief Building Official or City Engineer as appropriate for the items.

SECTION 2

Add 2.8 AS-BUILT PLANS
All sites requiring approval of a site plan or plat through the Land Use Authority process for the zone shall submit to the City as a part of the project completion documents, prior to final occupancy being issued, a set of City public utility as-built plans containing the following information. Open trench survey of all pipe elevations, fittings, and other related piping information; dimensions to surface improvements, as-constructed contours and final surface information, as-built plan and profile drawings of gravity flow dependent utilities. Survey points and other electronic mapping data shall be submitted in horizontal and vertical datum matching Utah County Surveyor's Office datum, currently understood by the City to be NAD 83 converted using the international foot and NAVD 29. All data shall be submitted in electronic, mylar, and paper formats as designated by City Engineer.

Add 2.9 CURB MARKERS
All sites or plats constructing any public utility which crosses under a City owned curb and gutter shall denote that utility in the curb in the form of a stamp or plug in the curb with the City approved designation code for that utility indicated within such.

PART II
PENALTY AND ADOPTION

SECTION 1. - Conflicting Provisions. Whenever any text adopted by this of this Ordinance conflict with the provisions of any text previously adopted by ordinance or resolution, the terms set forth in the text adopted by this Ordinance shall prevail.

SECTION 2 - Amendment to be Added to Development and Construction Standards. The City Council hereby authorizes and directs that insert pages reflecting the provisions enacted hereby shall be made and placed in the Official copies of the Development and Construction standards in the office of the City Recorder.

SECTION 3 - Penalty. Hereafter these amendments shall be construed as part of the Development and Construction Standards Ordinance of American Fork City, Utah, to the same effect as if originally a part thereof, and all relevant provisions of said Ordinance shall be applicable thereto, including, but not limited to, the enforcement, violation and penalty provisions thereof.

PASSED AND ORDERED PUBLISHED BY THE CITY COUNCIL OF AMERICAN FORK CITY, UTAH, THIS 28 DAY OF JUNE, 2011

Heidi K. Rodeback, Mayor Pro-Tem

ATTEST:

Richard M. Colborn, City Recorder

AMERICAN FORK CITY CORPORATE SEAL UTAH COUNTY STATE OF UTAH

ORDINANCE NO 2012-05-15

AN ORDINANCE AMENDING THAT CERTAIN ORDINANCE ENTITLED "DEVELOPMENT AND CONSTRUCTION STANDARDS OF AMERICAN FORK, UTAH", WHICH ORDINANCE SETS FORTH THE MINIMUM STANDARDS FOR THE DESIGN, QUALITY OF MATERIALS AND CONSTRUCTION OF PUBLIC IMPROVEMENTS WITHIN THE CITY;

BE IT ORDAINED BY THE CITY COUNCIL OF AMERICAN FORK, UTAH:

PART I
TEXT OF ORDINANCE

SECTION 1. The Development and Construction Standards of American Fork, Utah, is hereby amended by modifying or adding to the previously adopted text with the following text.

1.2 STREETS

Add:

20. All sidewalks placed within Arterial, Collector, or Minor Collector roadways shall be 5-minimim width, all local street rights-of-way sidewalks shall comply with minimum ADA passing requirements.

1.7 DRAINAGE SYSTEM PLAN

Modify:

Storm drainage pipe design standards to be in harmony with the American Fork City Storm Water Technical Manual. Thereby requiring piping of the 100-year return frequency storm event with the provision that storm water conveyance pipes may be sized for the 25-year return frequency storm event provided the 100-year event can be routed overland to a catchment directing the 100-year event to the detention or retention basin.

4.8 BACKFILLING

Modify final paragraph to read:

The backfill in all utility trenches shall be ether compacted or consolidated according to the requirements of the materials being placed. The in-place density shall be a minimum of 95% of the maximum dry density as determined by ASTM D 1557 (modified Proctor compaction test) for all granular materials. The City Engineer may approve the use of

AASHTO T-99 (standard Proctor compaction test) only when materials being compacted warrant consideration of such measurement methods as recommended by the Utah Chapter of the American Public Works Association or other recognized City standard reference publication for a given material type or other reasons as deemed appropriate for use of the AASHTO T-99 method. The ASTM D 1557 method shall be considered the default standard for all compaction efforts. Perform a minimum of one test per 200-linear feet of trench per 8-inch material lift depth of trench backfill to assure overall compliance. Each utility lateral trench shall be considered a separate trench for purposes of minimum testing requirements. In the event that testing indicates additional compaction is required, perform additional compaction efforts with commensurate additional testing as needed to assure compliance. The City Engineer shall approval all trench backfill prior to proceeding to any pavement system placement on a utility trench.

5.3 ASPHALT SURFACE REPAIR, ITEM E.

Add final sentence to paragraph to read:

Asphalt pavement patching shall be a minimum of 1-inch greater than the existing asphalt thickness. Minimum patch for local roadways shall be 3-inches. Minimum thickness of patch for all arterial, collector, minor collector, industrial or commercial roadways shall be 5-inches.

6.11.3 EXFILTRATION TEST

Modify first paragraph to add sentence at end:

All manhole and pipe sections shall also be required to pass an air test as described herein.

Remove word from third paragraph:

Remove the word "optional" from the third paragraph describing air tests.

7.4 CULINARY SERVICE LATERAL CONNECTIONS

Add sentence:

Upon approval by City Engineer, blue polyethylene pipe per AWWA/APWA specifications may be substituted for type K soft copper for 1-inch service laterals. Polyethylene laterals must contain tracer wire per standard drawing details.

9.4.7 POLYETHYLENE ENCASEMENT

Modify 2nd Paragraph:

Increase minimum nominal thickness in 2nd paragraph to 0.008" (8 mils)

13.1 GENERAL DESCRIPTION (ASPHALT PAVING)

Add D.

Pavements in Arterial or Collector Roads in non-sensitive lands areas shall be a minimum of 4-inch asphalt with 10-inch base course or equivalent pavement structural number as approved by City Engineer. Sensitive Lands Areas shall include a minimum of 10-inches sub-base course. Arterial/Collector road pavements shall be designed for the 20-year ADT forecasts per the latest version of the City Transportation Master Plan with a minimum of 5% trucks or greater as determined by City Engineer for the given roadway. Alternative pavement structure may be approved by City Engineer based upon a review of detailed pavement design by a qualified, licensed geotechnical engineer.

Add E.

Pavements in Sensitive Lands Ordinance areas shall be a minimum of 3-inch asphalt, 8-inches base course, and 12-inches subbase course for local roads; 4-inch asphalt, 9-inches base course, and 13-inches subbase course for collector roads; and 5-inches asphalt, 10-inches base course, and 16-inches subbase course for arterial roads. Pavements shall be designed for the 20-year ADT forecasts per the latest version of the City Transportation Master Plan or development traffic study where no master plan data is available with a minimum of 3% trucks or greater as determined by City Engineer for the given roadway. Alternative pavement structure may be approved by City Engineer based upon a review of detailed pavement design by a qualified, licensed geotechnical engineer.

Add F.

Existing roadways not having pavement structural number equivalent to design requirements shall be reconstructed to centerline of roadway by development abutting the roadway frontage.

SECTION 2

Add Chapter 16

That certain chapter denoted as chapter IV of the American Fork City Access Management Manual as prepared by Hales Engineering dated April 2012, said chapter therein denoted as "Recommended Access Management Requirements" is hereby adopted

as chapter 16 of the DEVELOPMENT AND CONSTRUCTION STANDARDS OF AMERICAN FORK, UTAH, thereby incorporating the requirements into said standards as a part of the City standards, specifications, and requirements for design and construction

SECTION 3

Reference Texts

The full text of the American Fork City Access Management Manual as prepared by Hales Engineering dated April 2012 is adopted as a planning document for City transportation planning and is hereby adopted as a supplemental standard to the DEVELOPMENT AND CONSTRUCTION STANDARDS OF AMERICAN FORK, UTAH as amended herein.

SECTION 4

Section 15 of the Development and Construction standards of American Fork, Utah entitled Detail Drawings, is hereby amended by adding the following as standard detail drawing applicable within American Fork City. The specific detail drawing applicable to each shall be as set forth in the attachments to this ordinance.

Catch Basin	15.2
Sidewalk Ramp	15.18
Sight Triangle	15.41
Off-Line Oil/Water/Sediment Separator	15.42

PART II
PENALTY AND ADOPTION

SECTION 1. - Conflicting Provisions. Whenever any text adopted by this of this Ordinance conflict with the provisions of any text previously adopted by ordinance or resolution, the terms set forth in the text adopted by this Ordinance shall prevail.

SECTION 2 - Amendment to be Added to Development and Construction Standards. The City Council hereby authorizes and directs that insert pages reflecting the provisions enacted hereby shall be made and placed in the Official copies of the Development and Construction standards in the office of the City Recorder.

SECTION 3 - Penalty. Hereafter these amendments shall be construed as part of the Development and Construction Standards Ordinance of American Fork City, Utah, to the same effect as if originally a part thereof, and all relevant provisions of said Ordinance shall be

applicable thereto, including, but not limited to, the enforcement, violation and penalty provisions thereof.

PASSED AND ORDERED PUBLISHED BY THE CITY COUNCIL OF AMERICAN FORK CITY, UTAH, THIS 8 DAY OF MAY, 2012.

James H. Hadfield, Mayor

ATTEST:

Terilyn Lurker, Deputy Recorder

SECTION 1

DESIGN STANDARDS

1.1 GENERAL DESCRIPTION

The design and construction of subdivisions shall not conflict with the natural terrain, natural drainage, existing topsoil, trees and vegetation.

Critical environment lands and lands subject to hazardous conditions such as, but not limited to, ground subsidence, land slides, mud flows, shallow water table, and FEMA Flood Plains shall be identified and shall not be subdivided until the hazards have been eliminated or evidence submitted that said hazards will be mitigated by the development and construction plans.

Within the last section of this manual are located the Standard Detail Drawings that depict the basic design standards. The preparation of plans and specifications in conformity with these standards will expedite the reviewing, processing, and approval of the submitted improvement plans with American Fork City.

The design of subdivisions in relation to streets, blocks, lots, open spaces and other design factors shall be in harmony with the following design standards.

1.2 STREETS

1. All streets must conform to the currently approved Street Plan Element of the General Plan of American Fork City.

2. The alignment and width of all through streets shall be preserved unless the Planning Commission determines that it has unusual topographical conditions that warrant advisable modification. Proposed streets shall be extended by dedication to the boundary of such property.

3. Where a large subdivision abuts upon a major thoroughfare, the Planning Commission may require access streets to be included in the street plan.

4. Street width is to be measured from street right-of-way line to street right-of-way line. Standard street sections are shown in the Standard Details of these Specifications Sheets No's 15.16 & 15.17. The minimum width of streets unless otherwise expressly permitted by the City Council shall be:

   A. For Local streets 60.0 feet, 36.0 feet of roadway surface width.

   B. Minor collector streets 66.0 feet, 42.0 feet of roadway surface width.

   C. For major collector streets 82.0 feet, 58.0 feet of roadway surface width.

   D. For minor arterial streets 96.0 feet, 72.0 feet of roadway surface width.

Street widths greater than minimum widths shall be installed as shown in the American Fork City Street Element of the General Plan and as directed by the American Fork City Pubic Works Director and/or City Engineer.

5. Cul-de-sacs (dead-end streets designed to be permanently closed to through traffic) shall be not longer than four hundred (400) feet from the right-of-way of the connecting street to the beginning of the turnaround. See Standard Drawing No. 15.7. Each cul-de-sac must be terminated by a turnaround of not less than a sixty (60) foot radius consisting of a minimum ninety-six (96) foot diameter roadway, measured to the lip of curb lines. Partial cul-de-sac bulbs are allowable where deemed appropriate by the Planning Commission. If the longitudinal slope of the roadway slopes into the cul-de-sac, necessary catch basins and drainage easements shall be provided. Double inlet catch basins will be required at all sag conditions.

6. Horizontal street alignments shall intersect each other as near as possible to right angles. In no case shall the deviation from 90 degrees be more than +/- 10 degrees. Any deviations shall be approved by the City Engineer.

7. When a street intersects into another street, street offsets between 15 feet to 120 feet shall not be allowed except where specifically authorized by the Planning Commission. Major Collector and Arterial streets may require 350 feet or more offsets as determined by the Planning Commission. All roadway access onto a UDOT roadway shall secure a permit approved from the city and UDOT region permits officer.

8. All arterial roads shall be designed and/or approved by the City Engineer and shall incorporate the following: limited access control along roadway, widths as required based on projected traffic volumes and road classification as defined by city street plans; and Section 1.2.4.

9. All subdivisions shall abut on and have access to at least one hard surfaced public street. Minimum, allowance for one or more future accesses as developments adjacent there to proceed. If the development exceeds 25 equivalent residential units, the second access must be incorporated in the subdivision unless otherwise approved by the Planning Commission.

10. Asphalt Paving and Granular Base Course.

    A. GENERAL: These specifications govern the preparation of subgrade, the placing of gravel and the placing of asphalt paving. No asphalt shall be placed until a pre-paving inspection is conducted by the City.

    B. SUBGRADE PREPARATIONS: The subgade shall be compacted to ninety-five pecent (95%) of laboratory density as determined by ASTM D1557. Compaction shall be accomplished by using a vibrating steel-wheeled compactor having a rated applied weight of fifteen thousand (15,000) pounds. Where subgrade soils are fine grained, a rubber tire roller may be used to obtain the specified compaction.

Soft and yielding spots shall be removed and replaced with suitable material and compacted to ninety-five percent (95%) density.

C. GRAVEL BASE: Gravel base course shall consist of crushed gravel or crushed rock conforming to one of the gradations hereinafter specified, placed on a prepared subgrade as specified herein. Slag shall not be accepted. All base course thicknesses must be approved by the Engineer.

The mineral aggregate shall conform to the following requirements:

1) On that portion of the aggregate passing the No. 40 sieve, the liquid limit shall not exceed twenty-five (25), nor shall the plasticity index exceed six (6) when tested in accordance with AASHTO T-89 and T-90.

2) The dry material aggregate shall be uniformly graded within one of the gradations listed below when tested in accordance with AASHTO T-27. The size of aggregate shall be at the option of the developer/contractor unless otherwise specifically designated.

PERCENT PASSING

Sieve Size	1" Maximum	¾" Maximum
1"	100	-
¾"	-	100
½"	70-100	-
3/8"	-	69-100
No. 4	41-68	46-75
No. 16	21-41	22-44
No. 50	10-27	10-28
No. 200	4-13	4-13

Total amount of material passing the No. 200 sieve shall be determined by washing with water in accordance with AASHTO T-11.

1) Aggregate shall have a percentage of wear not to exceed fifty (50) when tested in accordance with aASHTO T-96. This requirement shall be used only in determining the suitability of the aggregate source.

2) Crushed blast furnace slag, if used, shall be uniform in density and quality and have a rodded weight of not less than seventy-five (75) pounds per cubic foot when tested in accordance with aASHTO T-19. Open hearth slag will not be allowed.

D. CONSTRUCTION METHODS: The gravel base shall be placed on a compacted subbase, water added, and mixed to provide a moisture content at or near the optimum. The material shall be compacted to a density of ninety-five percent (95%) of laboratory density using ASTM D1557 standards. A minimum of six (6) inches of subbase gravel is required unless otherwise indicated on the Construction Drawings and Specifications.

E. BITUMINOUS SURFACE COURSE: Bituminous surface course shall be in accordance with Section 402 Bituminous Surface Course of the State of Utah Standards Specification for Road and Bridge Construction, 1979 Edition. One half inch maximum gradation shall be used. A minimum of three (3) inches of asphalt is required unless otherwise provided in the sensitive area section of the subdivision ordinance.

F. BITUMINOUS SEAL COAT: Bituminous seal coat shall conform to section 405 of the state of Utah Standard Specification for Road and Bridge Construction, 1979 Edition. AC-10 or AC-20 bituminous material shall be used. Seal coats shall be used only if specifically called for on the plans or specified in writing by the City Engineer.

G. BITUMINOUS PRIME COAT AND TACK COATS: Bituminous prime coat and tack coats shall conform to section 403 and 404 respectively of the Utah Standard Specifications for Road and Bridge construction, 1979 Edition. Tack coats shall be applied to the edges of existing asphalt when new asphalt is placed adjacent to it or when new asphalt is placed over old asphalt, or new concrete curb.

H. ASPHALT CUTTING: Cutting of the asphalt shall be made by sawing, providing a vertical joint in the surface unless otherwise approved by the City Engineer.

I. COLD WEATHER PATCHING: Trenches cut during winter months or when asphalt plants are not operating shall be patched the same day of the cut with a good quality cold mix and maintained until asphalt plants open. When the asphalt plants open, the cold patch shall be removed and a new patch of hot mix asphalt shall be placed within twenty (20) days of plant opening.

J. WEATHER REQUIREMENTS: No asphalt shall be placed when the ambient air temperature is less than fifty degrees (50°) F and rising. No asphalt shall be placed when there are any frozen materials in the subgrade or the base course. Asphalt shall not be placed during rain, when the road bed is wet, or during other adverse weather conditions. At the time of delivery to the site of the work, the temperature of the asphalt shall not be lower than two hundred sixty degrees (260°) F. Compaction shall be complete before the temperature of the asphalt drops below one hundred

eighty degrees (180°) F. Should asphalt temperature drop below one hundred eighty degrees (180°) F, asphalt placement shall be halted.

K. METHOD OF PLACEMENT: A self-propelled lay down machine shall be used on all City streets.

A box type lay down machine may be used on strip paving, and patches and areas where the self propelled type lay down machine may not be accessible, as determined by the City Engineer.

11. ALIGNMENT STANDARDS:

Roadway design should conform to the current edition of the AASHTO A Policy On Geometric Design Of Highways And Streets. Specific City standards are summarized below and are required unless specifically approved otherwise by the American Fork City Engineer and the American Fork City Public Works Director.

VERTICAL ALIGNMENT CRITERIA

Roadway Classification	Vertical Curve Length Min. (feet)	Design Speed (mph)	Maximum Grade (%)
Arterial	600	40	5
Collector	200	30	7
Local Street	100	25	10*

* or as approved by City Engineer and Planning Commission.

If the difference between the grades of two intersecting vertical tangents of a street is greater than 1.0%, an appropriate vertical curve shall be placed between them. Stop conditions may warrant greater intersecting grades to minimize curb return differentials.

Minimum grade on all roadways shall not be less than five/tenths of 1 percent (0.5%) unless approved otherwise by the City Engineer. Crest and sag vertical curves shall be controlled by "K value" appropriate to the design speed requirements of each roadway classification.

HORIZONTAL ALIGNMENT CRITERIA

Roadway Classification	Max. Degree of Curvature (In degrees)	Min. Radius (In feet)	Design Speed (In mph)
Local Residential	21° 0’	275	25
Local Industrial	11° 15’	475	30
Collector	11° 15’	475	30
Arterial	6° 45’	825	40

When street lines deflect from each other at any one point more than 5 degrees, there shall be a connecting curve. The center line radius of the curve shall be as per the table above. A minimum of a 100-foot tangent section between horizontal curves are required unless approved by City Engineer and Planning Commission.

Provide appropriate roadway transition taper lengths by adhering to the following formulas:

$L = \frac{WS^2}{60}$ for speeds of 40 mph or less

Length $L = S \times W$ For speeds greater than 40 mph

Where: L = Minimum length of transition in feet
S = Design speed in miles per hour
W = Width of transition in feet

Maintain minimum intersection sight distance requirements per AASHTO A Policy On Geometric Design Of Highways And Streets. Unless approved otherwise by the City Engineer.

12. Curbs at all intersections shall be rounded with curves meeting the following minimum requirements unless approved otherwise by the City.

Minimum Back of Curb Radius Measured at TBC for Various Street Intersections

		ROW width (Street Segment A)			
		60	66	82	96
ROW width (Street Segment B)	60	25	25	30	30
	66	25	30	30	30
	82	30	30	40	40
	96	30	30	40	40

13. All streets within the City limits will be required to be dedicated for public use except as called out otherwise in City Code. The City Engineer and Planning Commission may approve partial roadway improvements while preserving the standard utility placement as described in STD Drawing No's 15.16 & 15.17. The Planning Commission may require off-street parking areas within the retail center of a new subdivision and specify requirements for maintenance of the same. Where natural or scenic features and/or historic community assets exist, such locations are to be safeguarded either by dedication to a public or private agency by the subdivider.

14. Sidewalk ramps must be constructed at all street corners and other pedestrian crossings as shown in the STD Drawing No. 15.18 of these specifications.

15. Curb, gutter and sidewalks shall be installed on all proposed streets as required by the subdivision type. No bridging with soil will be permitted on curb, gutter, and sidewalk unless appropriate drainage and erosion control features (STD Drawing No. 15.2) are implemented as approved by American Fork City Public Works Director.

16. Catch basins as detailed in the Standard Details shall be provided where required for proper street drainage. Double curb inlet boxes shall be placed on all vertical sag conditions. All storm drainage discharge shall meet or exceed current EPA quality control measures. Stormwater discharge into irrigation facilities may require approval from American Fork Irrigation Company and/or the Church of Jesus Christ of Latter-day Saints Agricultural Farm Manager, Natural Resources Section Manager and any other downstream users.

17. Driveway approaches meeting the minimum criteria as detailed in the American Fork City Standard Details of these Specification Sheets No's 15.9 & 15.10, shall be cut in for all driveways after initial curb placement.

18. Additional roadway widening for left turn storage, acceleration/deceleration lines, or intersection widening may be required in addition to standard roadway widths in areas as deemed necessary by the City Engineer and Planning Commission.

19. All sidewalks placed within Arterial, Collector, or Minor Collector roadways shall be 5-minimum width, all local street rights-of-way sidewalks shall comply with minimum ADA passing requirements.

1.3 EASEMENTS

Easements of not less than ten (10) feet on each side of all lot lines will be required for poles, wire conduits, gas, ditches and other public utilities. Easements of not less than 20' shall be required for storm drains, sewer lines, water mains, canals, etc. Easements of greater width may be required where deemed necessary by City Engineer and Planning Commission. Sewer and storm drainage lines which are deeper than 5-feet to flowline shall be placed in a minimum of a 25-foot wide easement. Sewer lines which are deeper than 12-feet or greater than 12-inches in diameter shall be placed in a 30-foot wide easement or greater as determined by City Engineer.

1.4 WATER SYSTEM

1. Every development requesting water service or required to install a culinary water service shall include service to the property line. If, in the opinion of the City Engineer, there is not sufficient main line pressure in the entire culinary water system to maintain 20 psi minimum during peak hourly and fire flow conditions, the development must be postponed until changes in the main system are constructed. Refer to Section 9 "Water Lines" for piping materials and requirements.

2. Culinary water mains shall be a minimum diameter of eight (8) inches (reduced sizes may be used only as approved by the City Engineer) unless a larger size is specified by the City to meet minimum health department or insurance services (fire) requirements. All lines must be looped (no dead ends) except by express approval of the City Engineer.

3. Used pipe and fittings shall not be installed for use within the culinary water system.

4. All culinary water pipe shall be separated from sewage systems as required in Section 9.10 of these specifications specifically covering culinary water system requirements.

5. Install approved blowoff valves at dead ends and/or one thousand (1,000) foot spacing.

6. Install an approved backflow prevention assembly as directed by City Engineer.

1.5 FIRE HYDRANTS

1. Fire hydrants shall, where practicable, be installed between the curb and sidewalk a minimum of eighteen (18) inches from the back of the curb at locations determined by the City. Fire hydrants shall not be farther than five hundred (500) feet apart along the street. No dwelling unit shall be located farther than two hundred-fifty (250) feet from a fire hydrant measured along the curb and in to the unit. Outlets shall be eighteen (18) inches above finished grade and must face the street. Additional fire hydrants may be required at the discretion of the City Fire Marshall and City Engineer due to specific building or density requirements.

2. Fire hydrants shall comply with national standard regulations and shall have a minimum five (5) inch barrel in residential areas and a minimum six (6) inch barrel in close proximity to public buildings.

3. Fire hydrants should not be connected to any water main smaller than eight (8) inches inside diameter. Fire hydrants shall not be connected to a dead end line smaller than eight (8) inches inside diameter.

1.6 SEWAGE SYSTEM

1. No development approvals will be allowed to connect to an existing main-line system if the existing piping is incapable of carrying the projected sewage flows until major system changes are constructed that increase the flow capacity of the existing sewer main-line.

2. Sewer mains shall be a minimum of eight (8) inches in diameter and designed in accordance with Utah State Division of Health Standards.

3. All sewer mains and laterals must be inspected in place before backfilling is accomplished.

4. All sewer manholes shall have a 0.4-foot elevation drop uniformly through each manhole.

1.7 DRAINAGE SYSTEM PLAN

The drainage plan shall include an analysis of potential drainage problems, along with a proposal indicating how the surface water will be disposed of. Detention basins may be required to alleviate the impact on existing drainage facilities. Said plan shall also include the projected quantity of waters anticipated for a 100-year storm (piping), 100-year storm (detention facilities – if required), and 100-year storm (retention facilities). All drainage facilities shall be installed in conformance with approved City Drainage Master Plans.

Storm drainage pipe design standards to be in harmony with the American Fork City Storm Water Technical Manual. Thereby requiring piping of the 100-year return frequency storm event with the provision that storm water conveyance pipes may be sized for the 25-year return frequency storm event provided the 100-year event can be routed overland to a catchment directing the 100-year event to the detention or retention basin.

The development shall include necessary culverts, drain pipes, basins, and drainage channels. In order to insure the safety of the occupants of a subdivision, the Planning Commission may require the developer to cover or fence culverts and canals.

In areas where the highest water level in the ground is no closer than 8 feet to the ground surface and percolation rates are high and the area is designated on the City's Drainage Master Plan, Pre-treatment sumps may be used to dispose of surface waters. They must be designed for the 100-year storm and an auxiliary excess drainage system provided. All design data including 10-foot soil log, percolation tests, etc., must be submitted with the drainage plans. The sump design shall comply with applicable City and County requirements. In general, all discharges from development should be limited to a maximum of .1 cfs/acre with the utilization of on-site detention except as approved otherwise by the City Engineer.

Drainage basins (detention or retention) shall be designed for a 100 year storm and have a 1 foot freeboard, 3:1 slope (max), and grass covering with a sprinkler system unless otherwise approved. Where possible, the design shall incorporate pipe networking to minimize open channel flow through all drainage basins.

For single lots or small areas, the above may be waived so that pre-treatment sumps can be installed or drainage directed on to private property with a drainage easement.

Allowable use of streets for initial storm runoff in terms of pavement encroachment are as follows:

Street Classification	Maximum Encroachment
Minor, Collector, Arterial	No curb over-topping. Flow may inundate the shoulder only.

Inlet grating maximum design capacity for a standard grate is 5.0 cfs.

All drainage piping for surface and subsurface drainage (12" minimum size) shall have manholes at 400' spacing and at angle points. Minimum slopes shall be the same as required by the Utah State Division of Health for sanitary sewers. Piping, testing, etc., shall comply with specific requirements as defined in the section of these specifications covering storm drainage requirements unless otherwise approved by the City Engineer.

In addition to the standards stated herein, all design and construction of storm drainage systems shall comply with the latest version of the American Fork Storm Water Technical Manual, American Fork City Storm Water Management Program Manual, American Fork City Storm Drain Element of the General Plan, and any other associated or applicable storm water management manuals or ordinances as adopted by American Fork City.

Roof Drainage Systems:
Commercial and Multi-Family Applications: Roof drainage systems shall be designed such that all run-off from primary collection roof drains shall be routed to the underground storm water management system without creating a collected flow condition either across sidewalks or parking lot pavement systems. In all cases, roof drainage systems shall be designed in accordance with the adopted City Buidling Codes.

Roof drain retention systems are acceptable provided that they comply with all grading provisions of the adopted City Building Code and are sized to contain the 100-year design event with no percolation used for calculation purposes to account for frozen conditions in American Fork City's winter climate. Roof drain retention systems are not allowed in sensitive lands areas of the City as defined by the City Sensitive Land Ordinance.

Single Family Residential Applications: Roof drainage systems shall be constructed in accordance with the adopted City Building Codes. These systems shall be installed to prevent collected flow conditions on sidewalks or driveways and shall not discharge onto the adjacent property. Generally, roof drainage shall be either discharged to an aprpoved street drainage system or retained on site and are sized to contain the 100-year design event with no percolation used for calculation pruposes to account for forzen conditions in American Fork City's winter climate. Roof drain retention systems are not allowed in sensitive lands areas of the City as defined by the City Sensitive Land Ordinance.

General Property Drainage:
American Fork City code prohibits the discharge of storm waters onto an adjacent site. Where minor off-site or off-property landscape sheet-flow storm drainage discharge occurs, drainage systems shall comply with the laws of the State of Utah regarding off-site discharge of water. Applicant shall prove compliance with applicable laws where such drainage is proposed to occur. Substantial or any type collected drainage is

prohibited from leaving a given site outside of an aprpoved storm drainage management and discharge system.

1.8 SIGNS

Stop signs shall be posted at all exits of subdivision roads to city streets where warranted and/or required by the City Engineer for adequate traffic control. Slow, railroad, etc., signs may be required as applicable. Street signs shall be posted at all intersections. Design and installation shall comply with the standards as set forth in the latest edition of the Manual on Uniform Traffic Control Devices published by the U.S. Dept. of Transportation. Materials shall comply with Utah State Highway Department requirements. In no case shall any traffic control device be installed which does not meet applicable engineering warrants or which does not meet applicable minimum standards.

1.9 LOT CORNERS AND SUBDIVISION MONUMENTS

All rear lot corners shall be marked with an approved type of metal peg at least 5/8" in diameter and twenty-four inches in length. All lot corners adjacent to street frontage shall be projected to curb and gutter and indicated by copper rivet or 1/8" min. depth scribed in concrete curb. Corner markers and subdivision monuments must be installed prior to issuance of any building permits. A minimum of two (2) subdivision monuments are required on each subdivision plat. The line of sight between each subdivision monument shall not be obstructed with proposed buildings or building envelopes. See Drawing No. 15.28.

1.10 DEDICATIONS

All streets within a proposed subdivision must be dedicated in conformance with American Fork Road Master Plan except as approved otherwise by the American Fork City Engineer and Planning Commission.

1.11 DUMPSTER/TRASH ENCLOSURE

Dumpster/Trash Enclosures shall be constructed per the approved City standard detail. Unless a given site is specifically exempted by the Land Use Authority for a given zone, every commercial or multi-family site shall include a minimum of one enclosure(s) or more as appropriate in number to the uses proposed. Where a given use is for a food, automotive or similar parts store, automotive repair, or similar greasy waste or discharge use, the dumpster enclosure shall include a frost-free culinary water spigot and a discharge drain which flows through a grease trap prior to discharge to a City sanitary sewer facility. In such cases, site shall be graded such that only discharge from the enclosure shall be allowed into the sewer system. Dumpster enclosures with connections to the sanitary sewer system shall either contain a roof system to prevent storm drainage from passing to the sanitary sewer or site shall be billed by the City monthly as a part of the City utility bill for the average annual treatment cost of the drainage into the sewer system at the City standard rate per gallon.

SECTION 2

GENERAL CONSTRUCTION REQUIREMENTS

2.1 GENERAL DESCRIPTION

Prior to commencing construction on any improvements in a development or within public right-of-way of any streets or proposed streets of American Fork City, or any work that will connect with any City public utility, the City Public Works Department shall be notified and appropriate permits obtained so that the proper inspection may be provided, and so that it might be determined that the work has been approved. Certain types of construction shall have continuous inspection (at the discretion of the City Public Works Director) while others may have only periodic inspections.

1. Periodic inspections shall be required on the following:

   A. Street grading and gravel base.
   B. Excavations for curb and gutter and sidewalks.
   C. Excavations for structures.
   D. Trenches for laying pipe.
   E. Forms for curb and gutter, sidewalks and structures.

2. Continuous inspection shall be required on the following types of work:

   A. Laying of street surfacing.
   B. Placing of concrete for curb and gutter, sidewalks and other structures.
   C. Laying, of water pipe, valves, hydrants, drainage pipe, sewer pipe, and testing.

On construction requiring continuous City represented inspection, no work shall be started xcept in the presence of a City Inspector. No construction requiring inspection shall be performed on City Holidays, Saturday, Sunday or non-business hours, unless prior arrangements are made with the American Fork City Public Works Department. Appropriate scheduling may be required during months where city staff works 4-day work week.

It shall be unlawful to do any construction, excavation work on any street, curb, gutter, sidewalk, sewer line, water line or other infrastructure addition or improvement in the American Fork City without a Public Works permit from the City to do so.

2.2 REQUESTS FOR INSPECTION

Requests for inspections shall be made to the City Public Works Director by the person responsible for the construction. Requests for inspection on work requiring continuous inspection shall be made three (3) days prior to the commencing of the work. Notice shall also be given one day in advance of the starting of work requiring periodic inspection.

Prior to construction, the following data (5 complete copies) shall be furnished to the City Inspector: "Cut Sheets" for sewer and curb and gutter work, samples of road base material to be used, projected time schedules for completion of the work and shop drawings for materials, etc., to be installed.

No work which may be defective in its construction, or deficient in any of the requirements of these Specifications will be accepted. Failure of any officers of the City or the Inspector to point out such defects or deficiencies during construction shall not relieve the Contractor of his responsibility to comply with the specifications, and the Contractor shall correct any imperfect work, settlement, etc., wherever discovered, before the final acceptance of the work by the City.

2.3 CONSTRUCTION COMPLETION INSPECTION

An inspection shall be made by the American Fork City Public Works Department after all construction work is completed. Any faulty or defective work shall be corrected by the persons responsible for the work within a period of thirty (30) days of the date of Public Works Department Inspection Report defining the faulty or defective work.

2.4 GUARANTEE OF WORK

The improvements outlined in this document shall be guaranteed through Escrow bonds. Two (2) sets of certified construction recore (as-built) drawings shall be furnished to the City Engineer prior to releasing the final construction bond. The Standard Durability test period of 2-years begins once all improvements are completed, including property pins installed in top of curb and any required subdivision monuments, and construction record (as-built) drawings are accepted by the City.

2.5 BUILDING PERMITS

The untreated gravel base must be placed and graded, sewer, and storm drain lines and water lines, and inlet boxes completed and tested before any building permits will be issued.

2.6 BARRICADES

Maintain proper and sufficient barricades, signals, or warnings as needed at every construction site to give warning of and protect against accidents. Comply with requirements of the Manual Uniform Traffic Control Devices (MUTCD) for all traffic control on public streets.

2.7 OCCUPANCY PERMITS

Occupancy permits shall be obtained from the building official as outlined in the construction permit.

Sites requesting temporary occupancy permit in excess of a single two-week period shall provide the City a Performance Guarantee per the provisions of the Development Code in

the estimated amount of the work to be completed as approved by the City Chief Building Official or City Engineer as appropriate for the items.

2.8 AS-BUILT PLANS

All sites requiring approval of a site plan or plat through the Land Use Authority process for the zone shall submit to the City as a part of the project completion documents, prior to final occupancy being issued, a set of City public utility as-built plans containing the following information. Open trench survey of all pipe evaluations, fittings, and other related piping information; dimensions to surface improvements, as-constructed contours and final surface information, as-built plan and profile drawings of gravity flow dependent utilities. Survey points and other electronic mapping data shall be submitted in horizontal and vertical datum matching Utah County Surveyor's Office datum, currently understood by the City to be NAD 83 converted using the international foot and NAVD 29. All data shall be submitted in electronic, mylar, and paper formats as designated by the City Engineer.

2.9 CURB MARKERS

All sites or plats constructing any public utility which crosses under a City owned curb and gutter shall denote that utility in the curb in the form of a stamp or plug in the curb with the City approved designation code for that utility indicated within such.

SECTION 3

EARTHWORK

3.1 GENERAL DESCRIPTION

This section defines the requirements for excavation and backfill for structures, construction requirements of Earthen embankments and fills, and subgrade preparation for pavements and other preparation required by the Standard Drawings and Specifications.

3.2 EXCAVATION PERMIT REQUIREMENTS

Before any excavation in a city street can begin, an excavation permit with required fee must be obtained from the City. The applicant must show proof that a competent licensed contractor will do the work, present evidence of sufficient public liability insurance, and post required liability bonds.

3.3 CLEARING AND GRUBBING

The ground within the right-of-way shall be cleared of all trees, stumps, brush, weeds, roots and other objectionable materials. All branches of trees close enough to the roadway surface to be considered an obstruction to traffic or sight distance shall be carefully removed. All trees, stumps, roots, etc., are to be removed to a depth of not less than 3 feet below the subgrade.

All excavations made by removal of trees, stumps, etc., shall be filled with suitable material, which shall be compacted and consolidated to 95% of dry density as measured by AASHTO T-99 so as to make the surface at this point conform in contour and density to that of the surrounding ground.

3.4 EXCAVATION FOR STRUCTURES

When suitable subgrade soils exist, structures shall be founded on undisturbed original subsoil. All authorized excavation below the specified structure subgrade shall be replaced with concrete; monolithic with that of the slab above or with coarse gravel material conforming to classification A-1-a AASHTO designation and compacted to 95% of maximum dry density as measured by AASHTO T-99.

Subgrade soil for all structures, regardless of type or location, shall be firm, dense, thoroughly compacted and consolidated- shall be free from mud and muck and free from organic material, roots, limbs, etc.; shall be compacted to 95% of dry density as measured by AASHTO T-99; and shall be sufficiently stable to remain firm and intact under the feet of the workmen engaged in subgrade surfacing, laying, reinforcing steel, and depositing concrete. Coarse gravel or crushed stone may be used for subsoil reinforcement if results satisfactory to the City Engineer can be obtained thereby. Such material shall be applied in thin layers, not exceeding 6-inches, each layer being embedded in the subsoil by thorough tamping.

3.5 BACKFILL AROUND STRUCTURES

After completion of foundation footings and walls and other construction below the elevation of the final grades, and prior to backfilling, all forms shall be removed and the excavation shall be cleaned of all trash and debris. No backfilling around or behind structures shall be initiated until the concrete is fully cured for seven (7) days. Material for backfilling shall consist of excavated material or borrow of sand, gravel, or other suitable material, and shall be placed in layers not exceeding six (6) inches in uncompacted thickness. Each layer shall be compacted by suitable method to a density equal to 95% of maximum dry density as measured by AASHTO T-99. Backfill around curb and gutter in fill sections shall extend 18 inches beyond outside of the concrete gutter.

3.6 CONSTRUCTION OF EMBANKMENTS AND FILLS

Earth foundation surfaces shall be graded to remove surface irregularities and void of any organic material. Where suitable materials occur, after stripping, the foundation shall be scarified to a depth of not less than 6 inches, and the loosened material shall be moistened and compacted as hereinafter specified for each layer. All materials in embankments and fills shall be placed, moistened, and compacted as provided in the following paragraphs.

When the embankment or fill exceeds the amount of excavation, sufficient additional material shall be obtained from borrow pits provided by the Contractor. All material proposed to be imported shall be subject to the review and approval of the City Engineer prior to starting of hauling operations.

The materials used for embankment and fill construction shall be free from sod, grass, trash, frozen earth, rocks larger than 6 inches in diameter, and all other material unsuitable for construction of compacted fills.

3.7 COMPACTING EARTH MATERIALS

Import fill shall be deposited in horizontal layers having a thickness of not more than 6 inches after being compacted as hereinafter specified. The distribution of materials shall be such that the compacted material will be homogeneous and free from lenses, pockets, or other imperfections.

Prior to and during compaction operations, the material shall have the optimum moisture content required for the purpose of compaction and the moisture content shall be uniform throughout the layers, insofar as practicable. Moistening of the material shall be performed at the site of excavation, but such moistening shall be supplemented, as required by sprinkling at the site of construction. If the moisture content is greater than optimum for compaction, the compaction operations shall be delayed until such time as the material has dried to the optimum moisture content. When the material has been conditioned as hereinbefore specified, the backfill or embankment shall be compacted as follows:

Under Roadways and extending one foot beyond the proposed curb line the fill or embankment material shall be compacted to a density equal to not less than 95% of maximum dry density as measured by AASHTO T-99.

Under the Sidewalks, Driveways and other Structures the fill or embankment material (to at least one foot each side of the edge of the slab) shall be compacted to a density equal to not less than 95% of maximum dry density as measured by AASHTO T-99.

Other Fills and Embankments not listed above shall be compacted to a density equal to not less than 92% of maximum dry density as measured by AASHTO T-99.

3.8 SLOPES

The slopes of excavations and/or fills shall be shaped to meet safety requirements dependent on soil types, but in no case shall the finished slope be in excess of 3:1 for cut areas or 3:1 for fill areas except as approved otherwise by the City Engineer.

3.9 ROAD SUBGRADE PREPARATION

Rough subgrades shall be shaped and graded to within a tolerance of 0. 10 foot of design grade, and drainage shall be maintained at all times. Following roadway excavation, the subgrade shall be proof rolled by running moderate-weight rubber-tire-mounted equipment uniformly over the surface.

During the rolling operation, moisture content of the subgrade layer shall be maintained at not less than 97% or more than 105% of optimum moisture content. Rolling shall be continued until the entire roadbed is compacted to the specific density to a minimum depth of eight (8) inches.

SECTION 4

EXCAVATION AND BACKFILL FOR PIPELINES

4.1 GENERAL DESCRIPTION

This section covers the requirements for trenching and backfilling for underground pipelines. The work covered by this specification consists of furnishing all labor, tools, materials, equipment, and performance of all operations in connection with the excavation, trenching, and backfilling for underground pipelines and appurtenances. All clearing, grading and benching shall be considered part of the trenching operation.

4.2 UTILITY COORDINATION

Coordinate all interruptions of utility services with the Owner. Notify affected users a minimum of twelve hours in advance of, and restore service within four hours after, any interruption. City valves shall only be operated by city personnel or under their direction. Protect from damage any underground pipes, utilities or structures encountered. If such is damaged, restore to original condition.

4.3 CONTROL OF GROUNDWATER

All trenches shall be kept free from water during excavation, fine grading, pipe laying, jointing, and embedment operations. Where the trench bottom is unstable because of the presence of groundwater, and in cases where the static groundwater elevation is above the bottom of any trench, such groundwater shall be lowered to the extent necessary to keep the trench free from water and the trench bottom stable when the work within the trench is in progress. The surface water shall be prevented from entering trenches. Clay Dams will be required at all structures prior to or up-gradient of each manhole or a minimum of 200 feet to prevent mining of fines within the trench backfill. All water pumped from the trenches shall be conveyed to existing drainage channels, gutters, or drains. Any conflicts and costs incurred by the improper disposal of this water shall be borne by the Contractor. No surface or subsurface water shall be allowed to enter the existing City sewer system. High groundwater areas may require special construction practices to prevent pipe flotation, both during and after construction.

4.4 EXCAVATION FOR PIPELINE

All sewer lines shall be excavated and constructed starting at the existing facilities and proceeding continuously up stream with no interim segments left unconstructed. No variance therefrom shall be allowed except upon written approval by the City Engineer.

Excavation for pipelines shall be located as shown on the approved construction drawing or as staked in the field. Excavation for pipelines shall follow lines parallel to and equidistant from the location of the pipe centerline. Provide neat cut on asphalt surfaces to be removed during trench work to prevent excessive asphalt damage. Trenches shall be excavated to the depths and widths required to accommodate the construction of the pipelines, as follows:

1. Mechanical excavation of trenches shall not extend below an elevation of 4 inches below the bottom of the pipe after placement in its final position. All additional excavation necessary for preparation of the trench bottom shall be made manually. Any unauthorized excavation made below grade for any reason shall be backfilled as specified under "Foundation Stabilization."

2. Excavation for trenches in cobble-rock, stones, mud or other material unsatisfactory for pipe foundation, shall extend to a depth of at least 4 inches below the bottom of the pipe. A bedding material shall be placed and thoroughly compacted with mechanical tampers in 4 inch lifts to provide a smooth, stable foundation. Bedding material shall consist of suitable earth materials free from roots, sod, or organic matter. Trench bottoms shall be hand shaped.

   Where unstable earth or mud is encountered in the excavation at the grade of the pipe, a stable foundation must be created by removing the unsuitable material and backfilling with foundation stabilization material (depth 6" to 24" as required).

   The unsuitable wet material or muck shall be hauled off and disposed of by the Contractor. The Contractor shall take whatever measures are necessary to prevent the dry and wet trench materials from being co-mingled.

3. The trench shall be excavated such that the pipe is always centered in the trench. The maximum width of trench, measured at the top of the pipe, shall be as narrow as possible but not wider than 15 inches on each side of the pipe. The above trench guidance shall not limit the trench width where greater widths are necessary as per ASTM Standards or manufacturer recommendations. Greater trench widths may be used only upon the approval of the Public Works Director.

4.5 FOUNDATION STABILIZATION

Wherever the subgrade material does not afford a sufficiently solid foundation to support the pipe, the super-imposed load, and where water must be drained to maintain a dry bottom for pipe installation, the subgrade shall be excavated to the specified depth and replaced with crushed rock or gravel.

Gravel for pipe foundations shall be clean crushed rock or gravel conforming to the following gradation:

Screen	% Passing
1 ½	100
¾"	5

The gravel material shall be deposited over the entire trench width in 6 inch maximum layers, each layer shall be compacted by tamping, rolling, vibrating, spading, slicing, rodding or by combination of one or more of these methods. In addition the material shall be graded to produce a uniform and continuous support for the installed pipe. Care should be taken to make sure that soil migration does not occur. Filter fabric may be necessary in situations where fines from existing material would have a tendency to

migrate into the gravel pipe foundation. Control of soil migration is essential with flexible pipes where the soil envelope is the main structure of the pipe.

4.6 SHEETING, BRACING, AND SHORING OF EXCAVATIONS

Excavation shall be sheeted, braced, and shored as required to support the walls of the excavations to eliminate sliding and settling and as may be required to protect the workers, the work in progress, and existing utilities, structures and improvements from damage due to sliding and settling of trench walls. All such sheeting, bracing, and shoring shall comply with the requirements of the Utah State Industrial Commission, Occupational Safety and Health Administration (OSHA) accident prevention and safety provisions of the Contract.

All damage resulting from lack of adequate sheeting, bracing, and shoring shall be the responsibility of the Contractor, and the Contractor shall affect all necessary repairs or reconstruction resulting from such damage.

4.7 ACCESS TO TRENCHES

Safe and suitable ladders, which project 2 feet above the top of the trench, shall be provided for all trenches over 5 feet in depth. One ladder shall be provided for each 100 feet of open trench, or fraction thereof, and be so located that workmen in the trench need not involve more than 50 feet to a ladder and meet all other OSHA requirements.

4.8 BACKFILLING

The Contractor shall not proceed to backfill until each section of utility line has been inspected by the City. Backfill shall be carefully placed around and over pipes and shall not be permitted to fall directly on a pipe from such a height as to cause damage. In these specifications, the process of preparing the trench bottom to receive the pipe to a level at the pipe center line (spring line) is defined as bedding except for plastic, corrugated metal in which case the bedding is considered to extend to 12" above the top of the pipe. Where the excavated material has rocks over 2" in diameter or soils do not meet ASTM requirements, the zone shall be backfilled with modified bedding materials meeting the following gradations: 100% passing, a 1 -inch screen and 5% passing a No. 4 sieve.

The bedding material shall first be placed so that the pipe is supported for the full length of the barrel with full bearing on the bottom segment of the pipe equal to a minimum of 0.5 of the diameter of the barrel, then the remainder of the bedding shall be placed. Alternative outside methods of pipe laying which are recommended by the pipe manufacturer may be used if approved by the City Engineer.

Trench backfilling above the level of the pipe bedding shall normally be accomplished with native excavated materials and shall be free from frozen earth, organic material, rocks and solid objects larger than 8 inches in diameter, except as required to protect pipe as per manufacturer’s specifications.

The backfill in all utility trenches shall be either compacted or consolidated according to the requirements of the materials being placed. The in-place density shall be a minimum of 95% of the maximum dry density as determined by ASTM D 1557 (modified Proctor compaction test) for all granular materials. The City Engineer may approve the use of AASHTO T-99 (standard Proctor compaction test) only when materials being compacted warrant consideration of such measurement methods as recommended by the Utah Chapter of the American Public Works Association or other recognized City standard reference publication for a given material type or other reasons as deemed appropriate for use of the AASHTO T-99 method. The ASTM D 1557 method shall be considered the default standard for all compaction efforts. Perform a minimum of one test per 200-linear feet of trench per 8-inch material lift depth of trench backfill to assure overall compliance. Each utility lateral trench shall be considered a separate trench for purposes of minimum testing requirements. In the event that testing indicates additional compaction is required, perform additional compaction efforts with commensurate additional testing as needed to assure compliance. The City Engineer shall approve all trench backfill prior to proceeding to any pavement system placement on a utility trench.

4.9 CONSOLIDATION OF BACKFILL

Consolidation of backfill to within 4 feet of the ground surface shall be mechanically compacted by means of tamping rollers, sheep foot rollers, pneumatic tire rollers, vibrating rollers, or other mechanical tampers.

All precautions necessary shall be taken by the Contractor to prevent damage and movement (including floating) of the pipeline, structures and existing adjacent improvements and utilities. The allowance of the use of consolidation methods shall not be construed as guaranteeing or implying that the use of such methods will not result in damage to adjacent ground. The Contractor shall make his own determination in this regard and shall assume all risks and liability for settlement or lateral movement of adjacent ground, or improvements, or utilities, either on the surface of the ground or underground.

4.10 COMPACTION OF BACKFILL (TOP 4’ OF TRENCH)

Backfill shall be compacted by means of sheepsfoot rollers, pneumatic tire rollers, vibrating, rollers, or other mechanical tampers. The backfill in all utility trenches shall be either compacted or consolidated according to the requirements of the materials being placed. Under pavements, or other surface improvements, and within 3' of finished grade the in-place density shall be a minimum of 95% of laboratory standard maximum dry density as determined by AASHTO T-99. Perform a minimum of one test per 500 lineal feet of trench per 2' depth of trench to assure overall compliance. In the event that testing indicates additional compaction is required, perform additional testing as needed to assure compliance.

Where compaction methods are used, the material shall be placed at a moisture content such that after compaction, the required relative densities will be produced; also, the material shall be placed in lifts which, prior to the compaction, shall not exceed eight (8) inches.

Prior to compaction, each layer shall be evenly spread and moistened.

If the required relative density is not attained, test sections will be required to determine any adjustments in compacting equipment, thickness of layers, moisture content, and compactive effort necessary to attain the specified minimum relative density.

Approval of equipment, thickness of layers, moisture content, and compactive effort shall not be deemed to relieve the Contractor of the responsibility for attaining the specified minimum relative densities. The Contractor in planning his work shall allow sufficient time to perform the work connected with test sections, and to permit tests for relative densities.

If, in the judgment of the City Engineer or the Public Works Director, the trench shows signs of being improperly backfilled, or if settlement occurs, the contractor will be required to re-open the trench to a depth required for proper compaction, refilled, and recompacted, all in accordance with these specifications and to the satisfaction of City Engineer or the Public Works Director.

4.11 IMPORTED SELECT BACKFILL MATERIAL

In the event the native excavated material is not satisfactory for backfilling as determined by the City Engineer or the Public Works Director, the Contractor shall provide imported granular material. This granular material shall (as a minimum) be free from sod, vegetation, and other organic or deleterious materials, and meet the following gradations: 100% passing a 1-inch sieve and no more than 15% passing a #200 sieve. The depth of material herein required may be up to 3 feet as determined by the City Engineer.

4.12 RESTORATION OF CONSTRUCTION SITE

The Contractor/Developer shall clean up all construction debris, excess excavation and excess materials, and shall restore all fences, irrigation structures, ditches, culverts, and similar items during the progress of the work.

SECTION 5

RESTORATION OF SURFACE IMPROVEMENTS

5.1 GENERAL DESCRIPTION

The Contractor/Developer shall be responsible for the protection and the restoration or replacement of any improvements existing on public or private property at the start of work or placed there during the progress of the work. The Contractor/Developer, sub-divider or utility company making the cut or trench shall be liable for any damage, which may result to the pavement as a result of subsidence for a period of two years from the time that the backfilling is completed.

Existing improvements shall include but are not limited to permanent surfacing, sidewalks, curbs, gutters and ditches, driveways, culverts, fences, shallow utility lines, walls and planted areas. All improvements shall be reconstructed to equal or better conditions, in all respects, than the existing improvements removed.

5.2 GRAVEL SURFACE REPAIR

Where trenches are excavated through existing graveled surfaced areas such as roads, shoulders, driveways, parking areas, etc., the gravel surface shall be restored and maintained as follows:

1. The gravel shall be placed deep enough to provide a minimum of 6 inches material or greater to match existing thickness unless directed other-wise by the City Engineer or Public Works Director.

2. The gravel shall be placed in the trench at the time it is backfilled. The surface shall be maintained by blading, sprinkling, rolling, adding gravel, etc., to maintain a safe uniform surface satisfactory to the City Engineer. Excess material shall be removed from the premises immediately.

3. Material for restoring a gravel surface shall be obtained from sound, tough, durable gravel or rock meeting the following requirements for grading:

	Ideal	Tolerance
Passing 1-inch sieve	100 %	
Passing ½-inch sieve	85%	± 6
Passing No. 4 sieve	55%	± 6
Passing 16 sieve	30%	± 4
Passing No. 200 sieve	9%	± 2

4. Subgrade shall be compacted to a density of 95% (AASHTO-99) to a depth of 8 inches. Compact gravel surface to a minimum of 95% maximum density.

5.3 ASPHALT SURFACE REPAIR

1. Backfill trenches in compliance with Section 4.

2. Place road base in accordance with Section 13 to such depth as to provide a minimum of 6-inches below the pavement and, if the pavement is not to be restored immediately, the road base shall be brought flush with the pave surface. Reshape and recompact periodically until asphalt is restored to maintain a smooth and accessible road. Add water as required to prevent excessively dusty conditions.

3. Before any permanent resurfacing is placed, the Contractor shall cut the existing paving to clean, straight lines as nearly parallel to the centerline of the trench as practicable.

4. Existing bituminous paving shall be cut back as directed by the City beyond the limits of any excavation or cave-in along the trench so that the edges of the new paving will rest on undisturbed soil

5. Asphalt patching and repair shall be completed within 72 hours of completion of trench operation. Weather permitting, the bituminous surface shall be restored in Compliance with Section 6 to a minimum thickness of 3" or to match existing pavement thickness if greater, as directed by the City Engineer. Asphalt pavement patching shall be a minimum of 1-inch greater than the existing asphalt thickness. Minimum patch for local roadways shall be 3-inches. Minimum thickness of patch for all arterial, collector, minor collector, industrial or commercial roadways shall be 5- inches.

6. Pavement restoration shall include priming of pavement edges with type MC-70 bituminous material, placing rolled paint, hot mix bituminous material to the level of the adjacent pavement surface.

5.4 CONCRETE SURFACES

All concrete curbs, gutter, sidewalks and driveways shall be removed and replaced to the next joint or scoring line beyond the actually damaged or broken sections; or in the event that joints or scoring lines do not exist or are three or more feet from the removed or damaged section, the damaged portions shall be removed and reconstructed to neat, plane faces. All new concrete shall match, as nearly as possible, the appearance of adjacent concrete improvements.

All concrete work shall conform to Section 12 requirements.

5.5 IRRIGATION DITCHES

It shall be the responsibility of the Contractor to maintain and restore to their original condition canals, levees, culverts, drainage ditches all irrigation ditches in the construction area such that normal irrigation flows are not impeded. All costs related to maintaining the ditch(s) shall be borne by the Contractor at no expense to the City. All

ditches, structures, etc., shall be repaired and/or replaced to a condition equal to or better than that prior to construction.

SECTION 6

SEWER/DRAINAGE LINES

6.1 GENERAL DESCRIPTION

This section covers the requirements for piping materials and installation in the American Fork City sewer and drainage collection system. All materials and workmanship shall strictly comply with the Utah State Plumbing Code and the Utah State Health Department criteria.

6.2 PIPE LAYING

Different pipe materials have different requirements for proper installation. Therefore, each pipe material has specific pipe laying instructions.

6.3 INSTALLATION REQUIREMENTS FOR LINE AND GRADE

All pipe shall be installed accurately to the defined line and grade with the following limits:

Variance from established line and grade shall not be greater than one-sixteenth (1/16) inch per inch of pipe diameter in ten feet, and not to exceed one-half inch in ten feet, provided that such variation does not result in a level or reverse sloping invert; provided also that variation in the invert elevation between adjoining ends of pipe, due to non-concentricity of joining surface and pipe interior surfaces, does not exceed one-sixty-fourth (1/64) inch per inch of pipe diameter, or one-half (1/2) inch maximum.

6.4 SEWER GRADES

Unless otherwise approved by the City Engineer, all sewer grades shall be established by the use of an approved laser beam method. An above-ground method shall not be used. Tolerance shall be ±0.05'of actual grade. Above-ground methods may be acceptable for storm drain lines with the required tolerance of ±0.05' of actual grade being adhered to.

6.5 REINFORCED CONCRETE PIPE

Reinforced concrete pipe (RCP) shall comply with the requirements of ASTM C-76 with bell and spigot rubber gasket type joints for sanitary sewers and storm drain lines.

For hydraulic design considerations, a mannings n value of 0.012 for storm drain and 0.013 for sewer shall be used.

6.5.1 RCP BELL AND SPIGOT JOINTS

Bell and spigot joints, including rubber gaskets, shall conform to the requirements of the latest revision of ASTM Designation C-443. The pipe joint shall be so

designed as to provide for self-centering, and when assembled, to compress the gasket to form a watertight seal. The gasket shall be confined in a groove on the spigot, so that pipe movement or hydrostatic pressure cannot displace the gasket.

6.5.2 RCP PIPE INSTALLATION

All pipe installation shall precede upgrade on a stable foundation, with joints closely and accurately fitted. Rubber gaskets shall be fitted properly in place, and care shall be taken in joining the pipe units to avoid twisting of gaskets. Joints shall be clean and dry and a joint lubricant as recommended by the pipe supplier shall be applied uniformly to the mating joint surfaces to facilitate easy positive joint closure.

Pipe shall be installed with uniform bearing under the full length of the barrel, with suitable excavations being made to receive pipe bells.

Select material shall be compacted around the pipe to firmly bed the pipe in position. If adjustment of position of a pipe length is required after being laid, it shall be removed and rejointed as for a new pipe. When laying is not in progress, the ends of the pipe shall be closed with a tight fitting stopper to prevent the entrance of foreign material.

In addition to the above requirements, all pipe installation shall comply with the specific requirements of the pipe manufacturer.

Where pipe product is provided with a joint system intended to allow for segmental installation of piping materials, joints shall be closed tightly such that gasket system is fully engaged and no more than 1/2-inch of gap section between overlapping joint material (bell and spigot or another approved method) is visible via a televised inspection methods. Contractor shall meet with City designated inspection representative prior to any construction commencing to review City standards relative to installation of piping system.

6.5.3 GRAVEL FOUNDATION FOR RCP PIPE

Wherever the subgrade material does not afford a sufficiently solid foundation to support the pipe and superimposed load, and/or where groundwater must be drained, the subgrade shall be excavated to such depth as may be necessary and replaced with gravel compacted into place.

Gravel for concrete pipe foundation shall be clean gravel with 100% passing a 1-1/2-inch screen and 5% passing a 3/4-inch sieve.

6.5.4 RCP PIPE BEDDING

All pipe sewers and drains shall be protected from lateral displacement and possible damage resulting from impact or unbalanced loading during backfilling operations by being adequately bedded.

A groove shall be excavated in the bottom of the trench to receive the bottom quadrant of the pipe. Before preparing the groove, the trench bottom shall be excavated or filled and compacted to an elevation sufficiently above the grade of the pipe so that, when completed, the pipe will be true to line and grade. Bell holes shall be excavated so that only the barrel of the pipe receives bearing from the trench bottom.

Pipe bedding materials placed at any point below the mid-point of the pipe shall be deposited and compacted in layers not to exceed 8 inches in uncompacted depth.

Deposition and compaction of bedding materials shall be done simultaneously and uniformly on both sides of the pipe. Compaction shall be accomplished with hand mechanical compactors. All bedding materials shall be placed in the trench with hand tools or other approved method in such a manner that they will be scattered alongside the pipe and not dropped into the trench in compact masses. Bedding materials shall be loose earth, free from lumps, sand or gravel, free from rocks larger than three-inch diameter, with all materials free from roots, sod, or other organic matter.

In the event trench materials are not satisfactory for pipe bedding, modified bedding will be required. Modified bedding shall consist of placing compacted granular material on each side of and to the level of 12 inches above the top of the pipe.

Modified bedding material shall be graded as follows: 100% passing a 1-inch screen and no more than 5% passing a No. 4 sieve.

6.6 PVC PLASTIC PIPE

This section covers the requirements for rigid polyvinyl chloride pipe and fittings, hereinafter called PVC pipe and PVC fittings. The pipe and fittings and installation in sanitary sewer, storm drain and other gravity line construction, shall meet or exceed all of the requirement ASTM Specification D-3034 Type PSM for SDR 35 pipe for diameters from four-inch (4”) to fifteen inches (15”) and ASTM F679 for eighteen inch (18”) to twenty-four inch (24”) with integral bell gasket joints, and be supplied in maximum twenty foot lengths. This pipe shall be homogeneous throughout and free from cracks, holes, foreign inclusions or other defects. The pipe shall be as uniform as commercially practical in color.

All PVC sewer pipe shall be made from clean, virgin, Type 1, Grade 1, PVC conforming to ASTM resin specification D-1784. All pipe joints shall be bell and spigot type with rubber ring gasket conforming to ASTM D-1869, to permit expansion and contraction. Pipe and fittings must be assembled with nontoxic lubricant. Four-inch and 6-inch diameter pipe may be the solvent weld type provided an expansion joint is provided if the length of run exceeds 100 lineal feet. All pipes shall be less than 20 feet in length.

Spigot ends will have 15 degree tapered ends with memory mark around the diameter of the pipe to indicate proper insertion depth.

Wyes shall be of the same material as the pipe, and in no case shall have thinner walls than that of the pipe furnished. Sample wyes must be submitted for the City Engineer's approval, and his approval must be obtained before purchase of the wyes.

For hydraulic design considerations, a mannings n value of 0.012 for storm drain and 0.013 for sewer shall be used.

6.6.1 PVC FITTINGS

Fittings shall be made of PVC plastic conforming to ASTM-D1784, have a cell classification as outlined in ASTM D-3034.

6.6.2 PVC PIPE INSTALLATION

Pipe installation shall be in accordance with ASTM Recommended Practice D-2321 and the manufacturer's requirements. All pipe installation shall proceed upgrade on a stable foundation, with joints closely and accurately fitted.

PVC Pipe is a flexible pipe and requires deflection testing as per section 6.12.

Pipe shall be installed with uniform bearing under the full length *of* the barrel, with suitable excavations being made to receive pipe joints

Select material shall be compacted around the pipe to firmly bed the pipe in position. Haunching material (bed to springline) should be carefully worked under the haunches by hand as per ASTM D2321. The bedding shall be compacted from the pipe to the trench wall to ensure support. If adjustment of position of a pipe length is required after being laid, it shall be removed and re-jointed as for a new pipe. When laying is not in progress, the ends of the pipe shall be closed with a tight-fitting stopper to prevent the entrance of foreign material.

As per ASTM D2321, trench box installations will require a subtrench below the trench box or a trench box will not be allowed. Subtrenchs can not be deeper than 24” by OSHA Standards. Therefore, pipe diameters in excess of 24” will need to be installed without a trench box and with side slopes laid back to meet OSHA requirements. It is the contractors responsibility to follow OSHA guidelines for safe practices.

In addition to the above requirements, all pipe installation shall rigidly adhere to the specific requirements of the pipe manufacturer.

Where pipe product is provided with a joint system intended to allow for segmental installation of piping materials, joints shall be closed tightly such that gasket system is fully engaged and no more than 1/2-inch of gap section between overlapping joint material (bell and spigot or another approved method) is visible

via a televised inspection methods. Contractor shall meet with City designated inspection representative prior to any construction commencing to review City standards relative to installation of piping system.

6.6.3 PVC PIPE CONSTRUCTION LOADS

To preclude damage to the pipe and disturbance to the embedment zone, a minimum depth of backfill should be maintained before allowing vehicles or heavy construction equipment to traverse the pipe trench.

The minimum depth of cover should be established by the project engineer based on the specific project requirements.

In the absence of such a detailed investigation, the installer shall meet the following minimum cover requirements before allowing vehicles or construction equipment to traffic the trench surface, assuming that the minimum embedment zone densities are prepared as per ASTM D2321:

Provide minimum cover of at least 24 in. or one pipe diameter (whichever is larger) where Class I embedment materials have been utilized, or provide minimum cover of at least 36 in. or one pipe diameter (whichever is larger) where Class II or lower embedment materials have been utilized, and allow at least 48 in. of cover before using a hydrohammer for compaction directly over the pipe. Where construction loads may be excessive (e.g. cranes, earth moving equipment, etc.) consult with the project engineer to determine minimum operating cover requirements.

6.6.4 GRAVEL FOUNDATION FOR PVC PIPE

The pipe foundation shall be a minimum of four-inches (4”) in the compacted condition. Wherever the subgrade material does not afford a sufficiently solid foundation to support the pipe and superimposed load, it shall be excavated to such depth as may be necessary and replaced with crushed rock or gravel compacted into place. Gravel foundation material for pipe shall be placed only when, and to the depth, requested by the Engineer or specified on the Drawings.

Gravel for PVC pipe foundations shall be clean crushed rock or gravel with 100% passing a 1 1/2-inch screen and maximum of 5% passing a 3/4-inch sieve.

6.6.5 PVC PIPE EMBEDMENT

All pipe shall be protected from lateral displacement and possible damage resulting from impact or unbalanced loading during backfilling operations by being adequately bedded in suitable embedment material. The bottom of the trench shall be of stable materials. In general, coarse-grained soils, free of rocks and stones, such as graded crushed rock, gravel, sand, and other granular materials, are considered stable materials. A stable material shall be placed and compacted under the pipe haunches and up to the spring-line in uniform layers not

exceeding 8 inches in depth. When bedding is required, the same material should be used for both bedding and haunching. The same material shall be used to backfill the trench from the springline of the pipe to a point at least 12 inches above the top of the pipe. Each 8-inch layer of bedding, haunching and initial backfill shall be placed, then carefully and uniformly compacted to 95% of AASHTO T-180 (ASTM D-1557) density. Extra-fine sand, clay, silt, or large soil lumps shall not be allowed as bedding, haunching or initial backfill material.

The remaining backfill over the top of the initial backfill shall be placed in accordance with Section 4.9.

Modified bedding material shall be graded as follows:

100 percent passing a one and one-half inch (1-1/2") screen and 5 percent passing a No. 4 sieve.

6.7 CORRUGATED HIGH DENSITY POLYETHYLENE PIPE (HDPE)

6.7.1 SCOPE

This Specification covers the manufacture and installation of the Corrugated High Density Polyethylene Pipe (HDPE) detailed in the project plans.

6.7.2 HDPE PIPE

HDPE pipe may be used for storm drains of size less than 24-inches. HDPE shall not be used within city roadway right-of-way unless approved by the city planning commission. Pipe manufactured for this specification shall comply with the requirements for test methods, dimensions and markings found in AASHTO Designations M252, M294, and MP7. Pipe and fittings shall be made from virgin PE compounds which conform with the applicable current edition of the AASHTO Material Specifications for cell classifications as defined and described in ASTM D3350. Pipe supplied shall be AASHTO Type S and shall have a full circular cross section, with an outer corrugated pipe wall and an essentially smooth inner wall. Pipe and resin producers shall be certified according to the PPI/CPPA Third Party Certification Program. All corrugated polyethylene pipe, 12 inches in diameter and larger, shall contain the appropriate program mark, either an official label or permanent affixation prior to shipment.

For hydraulic design considerations, a mannings n value of 0.017 for storm drain shall be used. The higher n value is due to the corrugation growth that can be seen inside the pipe liner over time.

6.7.3 HDPE PIPE JOINTS

Soil tight joints shall have a bell and spigot design with an elastomeric gasket meeting the requirements of ASTM F477. Watertight joints shall meet a laboratory test pressure of 10.8 psi per ASTM D3212 and shall have a bell and

spigot or bell-bell design with an elastomeric gasket meeting the requirements of ASTM F477.

6.7.4 HDPE PIPE FITTINGS

The fittings shall not reduce or impair the overall integrity or function of the pipeline. Fittings may be either molded or fabricated. Common corrugated fittings include couplers, reducers, tees, wyes, and end caps. These fittings may be installed by various methods such as snap-on, bell and spigot, bell-bell and wrap around couplers. Only fittings supplies or recommended by the manufacturer shall be used.

6.7.5 HDPE PIPE INSTALLATION

Pipe installation shall be in accordance with ASTM Recommended Practice D-2321 and the manufacturer's requirements. All pipe installation shall proceed upgrade on a stable foundation, with joints closely and accurately fitted.

Pipe shall be installed with uniform bearing under the full length of the barrel, with suitable excavations being made to receive pipe joints

Select material shall be compacted around the pipe to firmly bed the pipe in position. Haunching material (bed to springline) should be carefully worked under the haunches by hand as per ASTM D2321. The bedding shall be compacted from the pipe to the trench wall to ensure support. If adjustment of position of a pipe length is required after being laid, it shall be removed and re-jointed as for a new pipe. When laying is not in progress, the ends of the pipe shall be closed with a tight-fitting stopper to prevent the entrance of foreign material.

As per ASTM D2321, trench box installations will require a subtrench below the trench box or a trench box will not be allowed. Subtrenchs can not be deeper than 24” by OSHA Standards. Therefore, pipe diameters in excess of 24” will need to be installed without a trench box and with side slopes laid back to meet OSHA requirements. It is the contractors responsibility to follow OSHA guidelines for safe practices.

In addition to the above requirements, all pipe installation shall rigidly adhere to the specific requirements of the pipe manufacturer.

Where pipe product is provided with a joint system intended to allow for segmental installation of piping materials, joints shall be closed tightly such that gasket system is fully engaged and no more than 1/2-inch of gap section between overlapping joint material (bell and spigot or another approved method) is visible via a televised inspection methods. Contractor shall meet with City designated inspection representative prior to any construction commencing to review City standards relative to installation of piping system.

6.7.6 HDPE PIPE CONSTRUCTION LOADS

To preclude damage to the pipe and disturbance to the embedment zone, a minimum depth of backfill should be maintained before allowing vehicles or heavy construction equipment traverse the pipe trench.

The minimum depth of cover should be established by the project engineer based on the specific project requirements.

In the absence of such a detailed investigation, the installer shall meet the following minimum cover requirements before allowing vehicles or construction equipment to traffic the trench surface, assuming that the minimum embedment zone densities are prepared as per ASTM D2321:

Provide minimum cover of at least 24 in. or one pipe diameter (whichever is larger) where Class I embedment materials have been utilized, or provide minimum cover of at least 36 in. or one pipe diameter (whichever is larger) where Class II or lower embedment materials have been utilized, and allow at least 48 in. of cover before using a hydrohammer for compaction directly over the pipe. Where construction loads may be excessive (e.g. cranes, earth moving equipment, etc.) consult with the project engineer to determine minimum operating cover requirements.

6.7.7 GRAVEL FOUNDATION FOR HDPE PIPE

The pipe foundation shall be a minimum of four-inches (4”) in the compacted condition. Wherever the subgrade material does not afford a sufficiently solid foundation to support the pipe and superimposed load, it shall be excavated to such depth as may be necessary and replaced with crushed rock or gravel compacted into place. Gravel foundation material for pipe shall be placed only when, and to the depth, requested by the Engineer or specified on the Drawings.

Gravel for PVC pipe foundations shall be clean crushed rock or gravel with 100% passing a 1 1/2-inch screen and maximum of 5% passing a 3/4-inch sieve.

6.7.8 HDPE PIPE EMBEDMENT

All pipe shall be protected from lateral displacement and possible damage resulting from impact or unbalanced loading during backfilling operations by being adequately bedded in suitable embedment material. The bottom of the trench shall be of stable materials. In general, coarse-grained soils, free of rocks and stones, such as graded crushed rock, gravel, sand, and other granular materials, are considered stable materials. A stable material shall be placed and compacted under the pipe haunches and up to the spring-line in uniform layers not exceeding 8 inches in depth. When bedding is required, the same material should be used for both bedding and haunching. The same material shall be used to backfill the trench from the springline of the pipe to a point at least 12 inches above the top of the pipe. Each 8-inch layer of bedding, haunching and initial backfill shall be placed, then carefully and uniformly compacted to 95% of

AASHTO T-180 (ASTM D-1557) density. Extra-fine sand, clay, silt, or large soil lumps shall not be allowed as bedding, haunching or initial backfill material.

The remaining backfill over the top of the initial backfill shall be placed in accordance with Section 4.9.

Modified bedding material shall be graded as follows:

100 percent passing a one and one-half inch (1-1/2") screen and 5 percent passing a No. 4 sieve.

6.8 CORRUGATED METAL (CMP) STORM SEWER PIPE

6.8.1 CMP GENERAL DESCRIPTION

This specification covers the manufacture and installation of Corrugated Metal Pipe, for use in storm drains. CMP shall not be used within City Road Right-of-Way unless approved by the City Engineer and/or City Public Works Director.

For hydraulic design considerations, a mannings n value from the following table shall be used for helical 2 2/3 x 1/2 in. corrugations.

CMP Pipe Diameter	Manning's n Value*
12 in.	0.011
15 in.	0.012
18 in.	0.013
24 in.	0.015
30 in.	0.017
36 in.	0.018
42 in.	0.019
48 in.	0.02
54 n. and larger	0.021

*Mannings n values for other corrugation types and sizes can be found through the National Corrugated Steel Pipe Association web site at: (http://www.ncspa.org/pdf/hydraulics.pdf)

6.8.2 CMP MATERIAL

The steel coils shall conform to the applicable requirements of AASHTO M 274 or ASTM A 929.

6.8.3 CMP PIPE

Pipe size shall not exceed 24" in diameter. The pipe sizes, and gauges shall be as shown on the project plans. Gauges shall be a minimum of 14 gauge.

6.8.4 HANDLING AND ASSEMBLY

Shall be in accordance with NCSPA's (National Corrugated Steel Pipe Association) recommendations.

6.8.5 INSTALLATION

Shall be in accordance with AASHTO Standard Specifications for Highway Bridges, Section 26, Division II or ASTM A 798 and in conformance with the project plans and specifications. In general, granular (non-plastic) backfill will be required a minimum of 12" beyond the pipe O.D. with 12" cover over the top of the pipe. Granular fills must meet AASHTO A-1, A-2, or A-3 and be no larger than 1 1/2" in size. If there are any inconsistencies or conflicts, the contractor must bring them to the attention of the project engineer.

It is the contractor's responsibility to follow OSHA guidelines for safe practices.

Where pipe product is provided with a joint system intended to allow for segmental installation of piping materials, joints shall be closed tightly such that gasket system is fully engaged and no more than 1/2-inch of gap section between overlapping joint material (bell and spigot or another approved method) is visible via a televised inspection methods. Contractor shall meet with City designated inspection representative prior to any construction commencing to review City standards relative to installation of piping system.

6.8.6 CONSTRUCTION LOADS

Construction loads may be higher than final loads, follow the manufacturer's or NCSPA's guidelines.

6.8.7 CMP PIPE JOINTS

Joints shall be made with re-rolled annular ends, with bolt, bar and strap connector, including O-ring gaskets.

6.8.8 CMP PIPE LAYING

All pipe installation shall proceed upgrade on a stable foundation, with joints closely and accurately fitted.

Pipe shall be installed with uniform bearing under the full length of the barrel, with suitable excavations being made to install the gasketed strap connector. Corrugated metal pipe shall be so laid that flow is over the lap of the sheets.

Select material shall be compacted around the pipe to firmly bed the pipe in position. Haunching material (bed to springline) should be carefully worked under the haunches of the pipe and compacted from the pipe to the trench wall (with minimum trench widths sufficient to provide 90% compaction). In embankment conditions two and one half (2-1/2) pipe diameters on each side of

the pipe will be required to ensure support. If adjustment of position of a pipe length is required after being laid, it shall be removed and re-jointed as for a new pipe. When installation is not in progress, the ends of the pipe shall be closed with a tight-fitting stopper to prevent the entrance of foreign material.

In addition to the above requirements, all pipe installation shall rigidly adhere to the specific requirements of the pipe manufacturer.

All pipe shall be unloaded and handled with reasonable care. Pipe shall not be rolled or dragged over gravel or rock and shall be prevented from striking rock or other hard objects during placement of the bedding. Pipe with protective coatings shall be handled with special care to avoid damage. Interior denting of the pipe that shows violation of this requirement shall cause the pipe to be removed and replaced at the contractors sole expense.

6.8.9 GRAVEL FOUNDATION FOR CMP PIPE

Wherever the subgrade material does not afford a sufficiently solid foundation to support the pipe and superimposed load, and where groundwater must be drained, the subgrade shall be excavated to such depth as may be necessary and replaced with crushed rock or gravel compacted into place.

Gravel for pipe foundation shall be clean crushed rock or gravel with one hundred percent (100%) passing a one-inch (1") screen and no more than five percent (5%) passing a 3/4” sieve.

6.8.10 CMP PIPE BEDDING

All pipe sewers and drains shall be protected from lateral displacement and possible damage resulting from impact or unbalanced loading during backfilling operations by being adequately bedded.

A groove shall be excavated in the bottom of the trench to receive the bottom quadrant of the pipe. Before preparing the groove, the trench bottom shall be excavated or filled and compacted to an elevation sufficiently above the grade of the pipe so that, when completed, the pipe will be true to line and grade.

Pipe bedding materials placed at any point below the mid-point of the pipe shall be deposited and compacted in layers not to exceed *six inches (6”)* in uncompacted depth. Deposition and compaction of bedding materials shall be done simultaneously and uniformly on both sides of the pipe. Compaction shall be accomplished with hand or mechanical compactors. All bedding materials shall be placed in the trench with hand tools or other approved method in such a manner that they will be scattered alongside the pipe and not dropped into the trench in compact masses. Bedding materials shall be loose earth, free from lumps; sand or gravel, free from rocks larger than one and one-half inch (1-1/2") diameter; with all materials free from roots, sod, or other vegetable matter.

In the event trench materials are not satisfactory for pipe bedding, modified bedding will be required. Modified bedding shall consist of placing compacted granular material on each side of and to the level of twelve-inches (12") above the top of the pipe.

Modified bedding material shall be graded as follows: One-hundred percent (100%) passing a 3/4" sieve and forty to seventy percent (40% - 70%) passing a No. 4 sieve and ten to twenty percent (10% - 20%) passing a No. 50 sieve and less than ten percent (10%) passing a No. 200 sieve.

The haunching area of the pipe shall be installed with the modified bedding (See ASTM B788) with compaction being accomplished by hand, without the use of mechanical compaction equipment.

When soft material is encountered and must be removed in order to maintain pipe on grade during construction, it must be removed for at least three pipe widths.

6.8.11 MANHOLE CONNECTIONS

Manhole Riser connections shall be made with re-rolled annular ends, with bolt, bar and strap connector, including O-ring gaskets.

6.8.12 SPECIAL CONSIDERATIONS

Hydrating cement, grout or concrete mixtures are not allowed to come in contact with the Aluminized Steel pipe under any circumstances. Non compliance with this requirement shall cause the contractor to remove and replace the impacted pipe section(s).

6.9 SUBSURFACE DRAIN PIPE

6.9.1 GENERAL REQUIREMENTS

Buried drainpipe with open joints or perforated pipe shall be provided for the drains in the locations shown on the drawings and as approved by the City Engineer. The Contractor shall furnish and lay the drainpipe.

6.9.2 MATERIAL

Drainpipe may be perforated PVC pipe (ASTM D-178), perforated or non-perforated concrete pipe. Corrugated polyethylene piping per ASTM F-405-77a may also be used if installed with direct burial laser grade control equipment.

Perforated pipe shall be PVC, extra-strength non-reinforced concrete pipe (ASTM C-14) or reinforced concrete pipe (ASTM C-76). All of which shall have 1/4" diameter perforations or as approved by the City Engineer. Concrete pipe shall be furnished with bell-and-spigot.

6.9.3 LAYING PIPE

When an open joint or perforated drainage system is utilized, a gravel backfill shall be placed under and over the pipe to the minimum depth as shown on the drawings. Approved filter fabric shall be used to separate the gravel liner from the native material. This fabric must entirely enclose the gravel and provide a complete overlap at the top of the pipe section. The pipe shall be laid carefully on the gravel in a workmanlike manner and to the lines and grades shown on the drawings or established by the City Engineer.

The maximum allowable departure from grade shall not exceed 0.10 feet. The finished bed for all pipe shall be made smooth, including removal of material under the bell, so that the full length of pipe will be evenly and uniformly supported. The pipe shall be laid and completed with adjacent ends closely abutted and with the bell ends upgrade. Any pipe that is broken, cracked, or otherwise unsuitable, as determined by the City Engineer, shall be removed and replaced at the Contractor's expense. The water level in the trench area where the pipe is being laid shall be held to a minimum. During placement of the pipe the water level in the trench shall not exceed 50 percent of the diameter of the pipe above the invert of the pipe. Water may be removed by permitting the water in the trench to flow down the previously installed drain pipe, provided that a screen cover is kept continuously in place over the exposed end of the pipe at all times, except when additional pipe is actually being placed. The screen used for this purpose shall be approved by the City Engineer and shall have maximum mesh openings of 1/8-inch. The pipe shall not be covered with backfill until it has been inspected and approved by the City Engineer. After approval, the trench shall be backfilled as prescribed in Section 4.9.

The Contractor shall keep the pipe drain and manholes free from deposits of mud, sand, gravel, or other foreign matter and in good working condition until the construction is complete and accepted. Any methods used by the Contractor to remove deposits of mud, sand, gravel, or other foreign matter from the drains, such as use of water or air pressure, shall be subject to the approval of the City Engineer.

6.10 MANHOLES

6.10.1 GENERAL REQUIREMENTS

The Contractor shall furnish and install watertight cast-in-place or precast concrete manholes at the locations shown on the Drawings approved by the City Engineer. Manholes shall be furnished complete with cast iron rings and covers. Manholes placed on longitudinal slopes greater than 5%, require “Precision Cover Systems, Inc.” manhole risers and lids. Manhole spacing shall not exceed 400 lineal feet unless otherwise approved by the City Engineer. All manholes and mainline cleanouts shall be accessible with a Mechanical Pump truck for scheduled maintenance by the City.

6.10.2 FOUNDATION PREPARATION

Dewatering of the site shall conform to the requirements for sewer trench dewatering in these specifications. Adequate foundation for all manhole structures shall be obtained by removal and replacement of unsuitable material with stabilization material; or by tightening with coarse ballast rock, or by such other means as provided for foundation preparation of the connected sewers, or as required by the City Engineer. Where water is encountered at the site, all cast in place bases shall be placed on a one-piece waterproof membrane, so placed as to prevent any movement of the water into the fresh concrete. Precast base sections shall be placed on a well graded granular bedding course conforming to the requirements for sewer bedding but not less than 8" in thickness and extending either to the limits of the excavation or to a minimum of 12" outside the outside limits of the base section. In the latter case, the balance of the excavated area shall be filled with select material well tamped to the level of the top of the bedding to positively prevent any lateral movement of the bedding when the weight of the manhole is placed upon it. The bedding coarse shall be firmly tamped and made smooth and level to assure uniform contact and support of the precast elements.

6.10.3 BASES

All manhole bases shall be pre-cast and shall have pipe inverts and a resilient connection between pipe and manhole for each pipe connecting to the manhole unless otherwise noted and approved by City Engineer. The rubber gasket boot PSX Series Six, or approved equal, shall be installed outside of the manhole and shrink-proof grout pipe connection will be put on the inside of the manhole. Cast-in-place bases shall be at least 9" in thickness and shall extend at least 6" radially outside of the outside dimension of the manhole section. Precast bases shall be a minimum of 9" in thickness. Concrete bases shall be placed upon a minimum of 6 inches of compacted 1-inch minus gravel.

The concrete base shall be constructed so the first section of the precast manhole has a uniform bearing throughout the full circumference of the manhole wall. Sufficient mortar shall be deposited on the concrete base to provide a water tight seal between the base and the manhole wall. Concrete used in the construction of the base shall conform to 6-1/2 bag, 4000 psi concrete as specified in the concrete section of these specifications.

Where sewer lines pass through or enter manholes, the invert channels shall be smooth and semi-circular in cross section conforming to the details shown on the drawing, incorporating a 0.40-foot drop through the manhole. Changes of direction of flow within the manholes shall be made with a smooth curve with as long a radius as possible. The floor of the manhole outside the flow channels shall be made with a smooth curve with as long a radius as possible. The floor of the manhole outside the flow channels shall be smooth and slope toward the channel at not less than 1 inch per foot.

Concrete pipe connections to manholes shall be achieved by use of manhole coupling adapters, rubber gaskets (ASTM C923 specifications), positive seal gasket system, or grouting a bell or spigot pipe at the appropriate location.

Upon written approval of the City Engineer, connecting boots may be used consisting of neoprene compound meeting ASTM C-443 specifications. The boot shall have a wall thickness of 3/8-inch. The boot shall either be "cast-in-place" in the precast base or attached to the precast base by means of an internal expanding band. When the boot is attached to the precast base, a watertight seal between the boot and the precast base must be accomplished. An external band shall be supplied and used to clamp and seal the boot to the pipe. The band shall be made of 300 series non-magnetic corrosion-resistant steel. After the band has been placed, it shall be completely coated with a bituminous material approved by the City Engineer.

The maximum size pipe that can be used in a 48-inch manhole is PVC at fifteen-inch (15") or concrete twelve inch (12"); all others shall be 60-inch (60") inside diameter. All manholes with three (3) or more pipes entering the base shall be 60-inch inside diameter.

All concrete for manhole bases shall comply with City approved specifications.

6.10.4 WALL AND CONE SECTIONS

All manholes shall be precast, sectional, reinforced concrete pipe of either 48-inch or 60-inch inside diameter as specified. Both cylindrical and taper sections shall conform to all requirements of ASTM Designation C-76 for Reinforced Concrete Culvert Pipe with the following exceptions:

A. The throat section of the manhole shall be adjustable, by use of pipe sections up to forty-eight inches (48") in height.

B. The taper section shall be a maximum of thirty-six inches (36") in height, for 48-inch (48") diameter manholes and thirty-nine inches (39") in height for 60-inch (60") diameter manholes, shall be of eccentric conical design, and shall taper uniformly to thirty inches (30") inches inside diameter.

C. The pipe used in the base section shall be furnished in section lengths of 1, 2, 3 and 4 feet as required.

D. Reinforcing steel shall consist of a circular cage with a minimum cross sectional area of three-tenths (0.3) of a square inch of steel per foot in both directions.

All joint surfaces of precast sections and the face of the manhole base shall be thoroughly cleaned and wet prior to setting precast sections. All joints, including grade rings, shall be set in butyl rubber gasket that is

permanently flexible and non-shrinking. All joints shall be water tight and free from appreciable irregularities in the interior wall surface.

6.10.5 PIPE CONNECTIONS

All pipes entering or leaving the manhole shall be placed on firmly compacted bedding, particularly within the area of the manhole excavation, which normally is deeper than that of the sewer trench. Special care shall be taken to see that the openings through which pipes enter the structure are completely and firmly rammed full of mortar to ensure water tightness.

6.10.6 BACKFILL

Backfill around the manhole and extending at least one pipe length into each trench shall be hand placed and hand tamped with select material up to an elevation of one foot above the top of each pipe, regardless of the specifications for backfilling the sewer trenches adjacent thereto. The balance of the backfill shall conform to the requirements for trench backfilling.

6.10.7 COVERS AND FRAMES

All iron castings shall conform to the requirements of ASTM A 48 (Class 30) for grey iron castings. Rings and covers shall be 30-inch in diameter with machined bearing surfaces and with minimum cover weight of 150 pounds and minimum ring weight of 233 pounds. Any cover which tends to rock or tip will be rejected. In addition to the foundry name and year of manufacture, the cover shall be marked “SEWER” or “STORM DRAIN” as appropriate.

All manhole rings shall be carefully set to the grade shown on the approved drawings or as directed by the City Engineer. The manhole covers shall be so installed to match the street profile. Where work is in paved streets, not less than 6" or more than 18" shall be provided between the top of the cone or slab and the underside of the manhole casting ring for adjustment of the casting ring to street grade.

6.10.8 MANHOLE STEPS

No steps shall be incorporated in manhole sections. All pre-fabricated holes for steps shall be filled in with shrink-proof grout.

6.11 CLEANING AND TESTING SANITARY SEWER LINES

6.11.1 CLEANING

After the sewer lines have been laid and the trench backfilled, they shall be thoroughly cleaned and tested for leakage and alignment in the presence of the City Engineer or the City Inspector before acceptance by the Owner. Laterals and trunk lines shall be flushed by water to remove all foreign material. Wastewater

and debris shall not be permitted to enter sewer lines in service, but shall be removed at the lowest manhole of the excavation. The scouring action shall be accomplished by hydraulic or jet cleaning. Other methods may be used upon approval of the City Engineer. After the lines have been thoroughly cleaned, they shall be tested between all manholes for displacement.

6.11.2 DISPLACEMENT TEST

The displacement test shall be supervised a conducted by the City Engineer or the City Inspector and shall consist of both of the following: (1) A light will be flashed between the manholes, or if the manholes have not as yet been constructed, between the locations of the manholes, by means of a flashlight or by reflecting sunlight with a mirror. If the illuminated interior of the pipe shows broken, misaligned or displaced pipe, or other defects, the defects designated by the City Engineer shall be remedied by the Contractor; (2) After sub base has been placed and compacted, prior to asphalt placement, the sewer line will be televised by the Contractor. The Contractor will supply and provide the City with a tape copy of the inspection along with a schematic plan identifying key locations on the video. The initial inspection shall be provided at no cost to the City. If the pipeline is found to be unacceptable, the problem shall be corrected by the Contractor and re-televised. Television inspection must be scheduled at least one (1) week in advance of date inspection is requested.

6.11.3 EXFILTRATION TEST

As required by the Public Works Director or City Engineer, each section of the sewer shall be tested between adjacent manholes by closing the lower end of the sewer to be tested and the inlet sewer of the upper manhole with stoppers. The pipe and manhole shall be filled with water to a point approximately 4 feet above the invert of the sewer at the center of the upper manhole or to 4 feet above the natural groundwater level, whichever is higher. All manhole and pipe sections shall be required to pass an air test as described herein.

The maximum allowable exfiltration shall not exceed one hundred fifty (150) gallons per inch diameter per mile per 24-hours for all installed sewer pipe.

A test may include an air pressure test at 4.0 PSI between adjacent manholes.

If the leakage from the sewer as shown by the test is in excess of the maximum allowable, the Contractor will make the necessary corrections to reduce the exfiltration to within permissive limits.

Where the difference in elevation between inverts of adjacent manholes exceeds 10 feet, the exfiltration leakage test will be modified as directed by the City Engineer.

House surface laterals shall be considered part of the main line sewer to which they are connected and shall be tested with the main line sewer.

6.11.4 INFILTRATION TEST

In addition to the exfiltration test, the newly laid sewer system shall also comply with the following infiltration requirements. Infiltration tests shall be conducted by placing an approved calibrated V-notch weir in the line just above the next lower manhole and plugging the line just above the next higher manhole. Sufficient time shall be allowed for the water level behind the weir to stabilize before reading. Dislodge any foreign material obstructing the weir before reading. Take successive readings until consistent results are obtained.

Whenever the rate of infiltration is found to exceed the maximum, conduct electronic or photographic visual inspection of the interior of the pipeline. Make repairs and continue to test the conduit until it is within specified limits prior to proceeding with further construction. Make repairs at all manholes to exclude all infiltration occurring, whether or not they are within specified limits.

The maximum allowable infiltration for any section of the system shall be as follows, subject to the limitations described hereafter: I = 150 gallons/mile/inch/diameter/day.

Upon completion of all sectionalized testing, the total project infiltration of the newly constructed system shall be measured and recorded. This value shall be limited to 125 gallons/mile/inch/diameter/day. Make repairs and continue to test for total project infiltration until it is within this specified limit.

6.12 DEFLECTION TESTING FLEXIBLE SEWER AND STORM DRAIN LINES

6.12.1 "GO/NO-GO" MANDREL PROOF TESTING

Not less than thirty (30) days after installation of the flexible sewer or drain pipe, the Contractor shall test the buried pipe to insure that ring-deflection of the pipe does not exceed five percent (5%) of the pipe's specified minimum inside diameter (ID). This proof test shall establish that the Contractor has installed the flexible pipe in full compliance with the Project Specifications thereby providing required pipe/soil structural strength.

The Contractor, with Inspector present, shall pull a "Go/No-Go" Mandrel, inspected and approved by the Engineer, through the full length of installed flexible pipe. The Mandrel shall be fabricated from suitable metal with a minimum of nine (9) properly sized radial fins mounted upon a center pulling shaft. In any case, the Mandrel shall be provided with an odd number of rigidly mounted radial fins. The Mandrel shall be provided with a proof-sizing ring that can demonstrate that the Mandrel's minimum outside diameter (OD) is not less than ninety-five percent (95%) of the actual minimum inside diameter of the installed flexible pipe. The Mandrel shall be pulled by the Contractor through one-hundred percent (100%) of the installed flexible pipe without using mechanical equipment. Failure of the Mandrel to pass through a pipeline shall be

deemed evidence of inadequate installation by the Contractor not in compliance with the Project Specifications.

The Engineer may require, if deemed appropriate or necessary, additional proof testing of designated lengths of the buried flexible pipe approximately one year (1 yr) after installation but prior to the expiration of the Contractor's Maintenance Bond. The flexible pipeline shall be cleaned adequately prior to performing the "Go/No-Go" Mandrel ring deflection proof test. The Contractor, with Inspector present, shall pull a Mandrel, approved by the Engineer, through the designated length of pipeline without using mechanical equipment. Failure of the Mandrel to pass through the pipeline shall be deemed evidence of inadequate installation by the Contractor not in compliance with the Project Specifications. If pipeline deflection exceeds 5% during proof testing, the pipeline shall be removed and replaced at the contractor’s expense.

SECTION 7

SEWER AND WATER LATERAL AND SERVICE LINE INSTALLATION

7.1 GENERAL DESCRIPTION

These specifications govern the excavation, installation, and backfilling of sewer and water service lines.

7.2 EXCAVATION

7.2.1 GENERAL REQUIREMENTS

Dimensions of trench and safety provisions shall be done in accordance with city, state, and federal regulations. Trenches shall not be left open at any time unless guarded with adequate barricades, warning lamps and signs. Asphalt shall be cut at least six (6) inches wider on each side of the excavation and shall be restored within seventy-two (72) hours of completion of trenching operation in a residential street. All other streets (collector, etc.) shall have asphalt replaced the same day. The contractor is responsible for maintaining trench until paving is completed. Asphalt surface repair shall be done in accordance with Chapter 8 of these specifications (Section 5.3).

7.2.2 SIDEWALK, CURB AND GUTTER

That portion of any lateral line to be placed under an existing curb, gutter and/or sidewalk shall be done by boring under, or cutting and replacing the existing curb, gutter and/or sidewalk upon approval of the City. All new sewer and water service lateral locations shall be stamped with an “S” or “W”, respectively, in the top of curb while concrete is still green.

7.3 SEWER LATERAL CONNECTIONS

Existing Service Laterals shall be constructed with materials compatible with the existing laterals with appropriate connections for joining the ends of existing laterals.

New service laterals shall be constructed with materials and procedures as specified herein. Sewer service laterals installed to lots shall be located ten feet (10’) downhill from the center of the lot. Sewer service laterals shall extend from the sewer main to a point ten feet (10’) beyond the street right-of-way unless designed or staked otherwise. The contractor is required to install a clearly marked indicator at the end of each lateral line. This indicator may be a 2x4 or a 1-inch (1”) P.V.C. pipe extended vertically above finish ground clearly visible upon site inspection. In addition to the marker, the Developer/Contractor shall identify the location (distance) of the lateral connection to the main from the nearest downstream manhole.

Laterals shall be capped with a cap suitable to withstand test pressure and prevent any leakage into or out of the lateral. Minimum slope shall be one-quarter-inch (1/4") per foot.

Minimum size for a sewer lateral pipe shall be 4-inches in diameter and a maximum of 6-inches in diameter. Pipe used for new service laterals shall be PVC plastic pipe conforming to ASTM D3034 SDR 35.

All connections shall be "insert-a-tee" or WYE at ten o'clock or two o'clock positioning to center of main line and shall be encased in concrete after inspection of connection is made.

Connection shall conform to City of American Fork standard drawing. Any deviation from this drawing must be approved in writing by the City Engineer.

7.3.1 PIPE BEDDING

Sewer lines shall be well bedded on a solid foundation throughout the length of the barrel. An excavation shall be made for the coupling. The pipe shall not rest directly on a rock or other hard surface. Where the pipe is laid in rocks, other coarse grained soil or clay, the trench shall be over excavated and the pipe laid on a four (4) inch bed of compacted fill with rocks not exceeding one-half (1/2) inch in diameter.

Selected material that is free from rocks, frozen lumps, and other objectionable material larger than one-half (1/2) inch shall initially be placed along each side of the pipe not higher than the centerline. This material shall then be tamped under the pipe-curbed railroad so that no voids are left. Additional selected material shall then be placed in approximately four (4) inch layers, with each layer being tamped until the pipe is covered by at least twelve (12) inches of compacted materials.

7.3.2 BACKFILL

The backfill of the trench from a point two feet behind, the sidewalk line, and running out to the street, shall be placed in horizontal twelve (12) inch maximum layers and compacted to ninety-five percent (95%) of the maximum laboratory density as determined by ASTM D1557 with mechanical tampers. All surface restoration shall conform to section 5.

7.3.3 CONSTRUCTION PROCEEDINGS

If a period of time is to lapse between backfilling a trench and restoring the surface, the granular base course shall be placed flush with the existing surface and maintained until new surface treatment is placed. The granular base course shall meet the compacted density specified in Section 13 of this chapter immediately prior to the placement of asphalt. The City may either test the compacted fill or require the contractor to have it tested for proper density. Any

trench that does not meet proper density shall be reexcavated and recompacted according to these specifications. The final asphalt surface shall absolutely not dip below the existing asphalt surface line. The contractor shall be responsible for any trench failures for 2 years after the date of trench restoration.

7.3.4 COVER OVER SEWER LATERAL LINES

There shall be a minimum of 3 feet of cover over all sewer lateral lines (3'6" minimum at property line).

7.3.5 SEWER CLEAN OUTS

There shall be a maximum distance of 5 feet from the foundation wall to the first exterior clean-out with a maximum distance between clean-outs of seventy-five (75) feet. There shall also be a clean-out at any ninety degree (90') bend or any combination of bends in excess of ninety degree (90'). Clean-out, standpipe can be cast iron or PVC with cast iron cap or brass cap.

All clean-outs shall remain visible and accessible.

7.4 CULINARY SERVICE LATERAL CONNECTIONS

All copper pipe will be Type K and shall comply with ASTM Specification B88. Upon approval by the City Engineer, blue polyethylene pipe per AWWA/APWA specifications may be substituted for type K soft copper for 1-inch service laterals. Polyethylene laterals must contain tracer wire per standard drawing details.

1" min. to be Type K Soft Copper (Compression Fittings Only)*
1 1/2 to 2" to be Type K Rigid Copper (Compression Fittings Only)*
Over 2" to be Ductile Iron

*Fittings other than copper shall be brass. No splices allowed between water main line and meter setter.

7.4.1 METER SETTERS, BOX AND COVER

Meter setter shall be equivalent with required service lateral size and shall be Ford or Mueller or approved equivalent with state approval dual check valves. The meter box shall be 21-inch (21”) diameter by thirty-six inch (36”) high corrugated with groove to fit over the inlet and outlet line. The meter cover shall be D&L supply L-2242 with 2” hole for Auto Reader with recessed standard waterworks pentagon head locking device and raised cast center rim. The top of water meter lid final grade is to be within one-half inch (1/2”) of final sidewalk grade or surrounding sloped grade. Electrical grounding shall not be permitted inside meter can or on street side of service.

7.4.2 FLARED JOINTS

Flared joints for soft copper water tubing shall be made with fittings meeting approved standards. The tubing shall be expanded with the proper flaring tool.

7.4.3 COPPER TUBING TO SCREW PIPE JOINTS

Joints from copper tubing to threaded pipe shall be made by the, use of brass adapter fittings.

7.4.4 COMPRESSION FITTINGS

A mechanical compression fitting which depends on an internal retention device to prevent pipe or tubing from separating shall be of a "Ford" or approved equivalent type fitting with a locking screw.

7.4.5 SOLDER AND SWEAT JOINTS

Joints in copper tubing shall be made by the appropriate use of approved brass or copper fittings. Surface to be joined by soldering shall be thoroughly cleaned bright by manual or mechanical means. The joints shall be properly fluxed with an approved non-corrosive type flux and made up with approved solder. All solders and fluxes shall not have a lead content that exceed current EPA guidelines.

7.4.6 CONNECTION TO MAIN

Connections of services to main lines shall be by direct tap corporation type stop and 24-inch gooseneck formed with the tubing. All connections shall be made using compression joints type fittings. The service saddle shall be a Ford F-202, double strap, service saddle with one-inch (1”) IPT outlet or equivalent. The corporation stop shall be a one-inch (1”) Mueller H 15008 “IP” thread for direct tap and a Ford pace joint F-1100 for service saddle top.

7.5 SEPARATION

7.5.1 SEPARATION BETWEEN SEWER AND WATER SERVICE LINES

Water service lines shall not be run or laid in the same trench as the building sewer lateral, unless, the water service line is placed in a solid shelf excavated at one side of the common trench. At all times there shall be at least eighteen (18) inches of separation horizontally and vertically above the sewer lateral.

7.5.2 STOP-AND-WASTE TEE AND VALVE

There shall be at least a two (2) foot separation between the meter box and the stop-and-waste tee and valve. Drain gravel shall be installed around stop and waste.

7.5.3 WATER SERVICE LATERAL TO MAIN LINE

Water service laterals to water main shall have at least 5' horizontal and 18" vertical separation with sewer lateral in public right-of-way. A 3' separation shall be maintained from water main or water service lines to water main by paralleling utilities.

7.6 SECONDARY WATER SERVICE LATERAL CONNECTION

Secondary Water service laterals shall be constructed with materials specified and at the locations shown on the Standard Drawings or at the actual location established during construction. This section covers the installation of the service connection from the main to right-of-way line.

7.6.1 SERVICE SADDLE SPECIFICATION (For use with C900, C905, and C909 PVC plastic pipe).

All service clamps shall be of a “full encirclement design” and shall be I.D. controlled, which design will eliminate the possibility of pipe crushing due to the over-torqueing of the nuts upon installation.

A rigid liner shall be used inside of tubing at the compression fitting on a 1-inch single service connection. No rigid liner will be required inside of tubing at compression fittings on 1 1/2-inch or 2-inch service lines.

All service clamps shall be manufactured of brass cast in conformance to AWWA C800, General Section – 1, Paragraph 1.2 (ASTM B62).

The two sides of the clamp shall be held together by high quality silicon bronze hex bolts (in sizes 1” and larger) or silicon bronze slotted screws (in sizes smaller than 1”). No dissimilar metals shall be allowed at this point thus eliminating the possibility of galvanic corrosion.

All service clamps shall be Romac 202NS or Romac 305 Series for 14” or larger pipe.

7.6.2 POLYETHYLENE TUBING

Pipe for the transmission of secondary water from the main to utility box shall be Polyethylene CTS tubing. Polyethylene CTS tubing shall be manufactured in accordance with the standard specification for Polyethylene PEP plastic tubing as

issued by the American Standard for Testing and Materials under ASTM D 2737 and AWWA C901.

Material designation code:	Polyethylene PE 3408
Plastic Extrusion Compound:	Type III, Class C, Grade 34 as defined by ASTM D 1248

Standard pipe dimension ration CTS (SDR 9) 200 psi pressure rating.

All tubing for service lines shall be cut and installed in a neat and workmanlike manner by a method recommended by the manufacturer.

Tubing shall be WESTFLEX PE 3408 Gold Label or approved equal, purple in color.

7.6.3 COMPRESSION CONNECTIONS

The interior surface of the coupling nut, including threads, shall have a baked on, fluorocarbon coating to reduce assembly friction and prevent the gasket from tuning and twisting during tightening. The nut shall bottom on a cast or machined shoulder on the body when properly assembled. This design will provide a visual check to assure connection is properly assembled.

The sealing gasket shall be of molded synthetic rubber (ASTM D2000) with molded-in-place bronze spring (ASTM A134 Alloy #6) to eliminate the possible cold flow of the basket between the pipe and fitting. A gripper band of hardened stainless steel (ANSI Type 401) shall be fitted into the gasket. When the gasket is compressed, it will cause the gripper ring to distort the pipe, giving the fitting a high resistance to pull-out. The gripper band shall overlap itself to prevent cold flow of the gasket into the cavity under the band.

When Mueller 110 compression fittings are used with PE pipe, stainless steel pipe stiffeners are required to eliminate cold flow of plastic pipe.

All fittings are to be for CTS Polyethylene pipe.

The minimum pull-out load for the fitting when used with PE pipe shall be as follows for each given size:

SIZE	MINIMUM PULL-OUT (ft-lbs)
1”	400
1 ½”	500
2”	500

Mueller 110 compression coupling and fittings or approved equal are to be used on all PE plastic pipe installations.

7.6.4 SERVICE FITTINGS

All service fittings, such as brass tees and brass ells, shall be Mueller Insta-Tite connections or approved equals.

7.6.5 BALL STRAIGHT SERVICE VALVE

All components shall be manufactured of brass cast in conformance to AWWA C-800, General Section 1, paragraph 1.2. The valve shall have a strong, reliable ball/stem connection that provides strong, reliable performance and resist breakage. The stem design must be totally blow-out-proof to prevent separation and assure dependable safe operation. The stem shall have double O-ring seals supported in precision-machined grooves and provide secure, leak-tight sealing. The end pieces shall be O-ring sealed to provide additional protection against leaking. The ball shall be manufactured of 85-5-5-5 waterworks brass; no other composition will be accepted. The ball shall be fluorocarbon-coated for ease of operation. The valve shall be a quarter turn valve; and the fully open and closed positions shall be controlled by check lugs integrally cast on body to assure positive action. The valve shall have a lock wing to permit locking the valve in the closed position. The inlet shall be a compression connection, and the outlet shall be F.I.P. thread for 1-1/2 and 2 inch and standard meter coupler for 1 inch.

All brass castings shall conform to ASTM B62, latest revision, standards for composition brass or ounce metal castings of 85-5-5-5. The valve shall be manufactured and tested in accordance with ANSI/AWWA C800, latest revision. A notarized certificate stating compliance with the standards may be required. All component parts, body, key, washer, nut and tube nut, shall have the same metal analysis. The valve must maintain a working pressure of 300 PSIG.

All fittings are to be CTS (Copper Tube Size) size, used on CTS Polyethylene Pipe. No IPS Polyethylene Pipe or fittings will be accepted.

Ball Straight Service Valves shall be Mueller B-25170 ball valve for one inch connections and Mueller B-25028 for 1-1/2 and 2 inch connections.

7.6.6 SERVICE BOX

Service Box shall be a standard green, fiberglass irrigation box with cover. The Service Box shall be installed over the valve and hose bib. A sign shall be attached or embossed to or on the cover indicating as follows: “IRRIGATION”. Box shall be Carson 1220-12-4 or 1419-12-4 series utility box with lid recessed and shall be provided with Waterworks Pentagon Head locking device or approved equal.

7.6.7 METER IDLER

All service connections shall include two (2) C38-44-2 MIP X STRT meter couplings on both sides of a #4 brass meter idler.

Pipe for the transmission of secondary water from the meter coupler to the homeowner's property line shall be Schedule 40 brass nipple with cap. Pipe shall be manufactured to meet the requirements of 85-5-5-5 waterworks brass. No joints will be allowed under sidewalks or other paved surfaces.

7.6.8 HOSE BIB

All hose bibs used in the service connection assembly shall be a ¾-inch Arrowhead I-400 inverted brass hose bib or equal.

7.6.9 LOCATION OF STUB PIPES

Three (3) notches on the front corner of the curb shall mark the location where the secondary water service crosses the curb. Each cut shall be 1/8" – 3/6" deep and 3/8" – 1/2" apart.

7.6.10 SERVICE PIPE INSTALLATION

The polyethylene service pipe shall be installed by use of directional boring under all existing paved surfaces. Where subsurface materials or conditions will not permit installation by this method, open trenching will be permitted with the approval of the Public Works Representative/Engineer. Open trenching may be used in new streets not yet paved.

SECTION 8

STORM WATER PRE-TREATMENT SUMPS

8.1 GENERAL DESCRIPTION

This specification governs furnishing of materials for installation of storm water pre-treatment sumps.

8.2 STORM WATER PRE-TREATMENT SUMP

Pre-Treatment Sumps shall be located as staked in the field and indicated on the plans. They shall be to the grade indicated by the cut sheets and as staked in the field. Excavation and backfill shall conform to Section 3 of these specifications. If the sump is located in an area where the earth is stratified with gravel layers, care shall be taken during backfill to be sure that these layers are not sealed off from the sump beginning two (2) feet below the bottom of the sump up to the top of the subgrade. One and one half to two inch (1 ½" to 2") diameter drain rock shall be used. The original material shall be removed and the total backfill done with imported drain rock (no slag). The design storage requirements for storm water may account for up to 30% of the volume of the drain rock volume. After backfilling is completed, the entire excavation shall be thoroughly flooded to insure that settlement is complete. Grates shall be set in place and adjusted for final elevation and alignment. Geotextile a fabric barrier is required between the drain rock and road base (or other backfill) preventing the possibility of road base or native material migrating into the void space of drain rock. (See Standard Drawing #15.14).

Pre-treatment sumps shall be constructed of reinforced concrete, precast sections and shall meet the requirements of ASTM C478-73 in accordance with standard detail drawing. All grates located within the roadway section or parking lot shall meet all HS2O loading design requirements.

SECTION 9

WATER LINES

9.1 GENERAL DESCRIPTION

This section covers the requirements for piping materials and installation in the American Fork City water distribution system. All materials and workmanship shall strictly comply with the current revisions of the Utah State Rules for Public Drinking Water Systems (USRPDWS) and the Uniform Plumbing Code (UPC). In the event of conflict between this section, USRPDWS and the UPC, they shall rank in the following order of precedence: (1) this Code Section, (2) USRPDWS, (3) UPC.

The end of water lines shall be covered when work is not in progress to prevent debris, animals, etc., from entering the line. All culinary water lines shall be of 8" minimum size unless otherwise approved by the City Engineer.

If the size of any piping or fitting is not evident in the drawings, the Contractor shall request instructions from the City Engineer as to the proper sizing. Any changes resulting from the failure to contact the Engineer to request clarification shall be at the Contractor's expense.

9.2 CONCRETE THRUST BLOCKING

All fittings at bends and branches in water pipe lines shall be provided with concrete thrust blocking as shown on the American Fork City Standard Details. Blocking shall be constructed so the bearing surface is in direct line with the major force created by the pipe or fitting. Concrete shall be poured in place and shall bear against solid undisturbed earth at the sides and bottom of the trench excavation and shall be shaped so as to not obstruct access to the joints of the pipe or fitting. The concrete mixture shall have a minimum 28-day compressive strength of 2500 pounds per square inch and shall comply with the requirements of Class C concrete as outlined in Section 12. All fittings shall be covered with plastic or other approved materials prior to pouring the thrust block. The blocking shall be so placed that the pipe and the fittings will be accessible for repair.

9.3 PIPE LAYING

Install pipe with bell ends facing the direction of laying. Where pipe is laid on a grade of 10 percent or greater, proceed uphill with the installation with the bell ends facing upgrade. Make gradual pipe elevation changes as practicable to clear existing obstructions.

The pipeline shall be installed so that a positive or negative grade is maintained between high and low points to avoid air pockets. Provide air vents as required. If permanent air vents are not required, record location of all high points so they may be readily located.

9.4 DUCTILE IRON PIPE

9.4.1 GENERAL REQUIREMENTS

Ductile iron pipe shall be Class 50 for slip-on or mechanical joint piping (Class 51 for 8-inch size and under) and Class 53 for flanged joint piping unless otherwise required by the City Engineer due to loadings, site conditions, etc.

9.4.2 MATERIALS

Ductile iron pipe for the transmission and distribution of water shall be manufactured in accordance with AWWA C151 and ANSI A-21.51 "American Standard for Ductile-Iron Pipe, Centrifugally Cast in Metal Molds or Sand-Lined Molds, for Water or Other Liquids.

All pipe shall be made of good quality ductile cast iron and of such chemical composition and structure as is required to meet the physical and mechanical property requirements of the Standard.

9.4.3 JOINTS

Ductile iron pipe shall be of the following types, as indicated on the approved plans.

A. Mechanical joints and the rubber gaskets and lubricant for ductile iron pipe, shall comply with the requirements and be dimensioned in accordance with AWWA C-151 and C-111. All gasket surfaces shall be smooth and free from imperfections. All mechanical joint gaskets shall be armor guard type gaskets and shall conform to tests in accordance with construction specifications and shall be less than one year old. Lubricant shall be non-toxic and have no deteriorating effects on gasket materials. Lubricants shall not impart taste, odor, or flavor to water in the pipe..

B. Rubber gasket push-on joints, and the rubber gaskets and lubricant for ductile iron pipe shall comply with the general requirements of AWWA C- 111 of latest revision. Gaskets shall be free from defects and not over one year old. Lubricant shall be non-toxic and have no deteriorating effects on gasket materials. Lubricants shall not impart taste, odor, or flavor to water in the pipe.

C. Cast iron pipe flanges, and bolts and nuts therefore, shall be dimensioned in accordance with ASA B16.2 for Class 150, and ANSI A21.10. Threads for screwed on flange pipe shall comply with ASA B-2.1. Flange joints shall be bolted firmly with machine, stud or cap bolts of proper size. Flange shall be faced and drilled in accordance with ANSI A21.10.

9.4.4 FITTINGS

A. Mechanical Joint Fittings: Mechanical joint fittings shall conform to the provisions of ANSI/AWWA C110/A21.10-82 or C153/A21.53-58.

B. Push-on Fittings: Push-on fittings shall conform to ANSI A 21.10 with bells, sockets, and plain ends per ANSI A 21.11.

C. Flanged Fittings: Flanged fittings shall conform to ANSI/AWWA "American Standard for Cast Iron Fittings".

All flanges shall be faced and drilled. Where cap screws or stud bolts are needed, flanges shall be tapped to support cap screws or stud bolts.

9.4.5 LINING AND COATING

The waterway surfaces of all ductile iron water pipe and fittings shall be completely covered with a uniform thickness of cement-mortar or covered with a bituminous seal coat, all in accordance with AWWA C-104, and AWWA C-151. Ductile iron pipe or fittings lined in the field will not be accepted as conforming to AWWA C-104.

The outside surface of all "buried" ductile iron pipe shall be coated with a bituminous coating in accordance with AWWA C-151 requirements.

9.4.6 CORROSION PROTECTION AND SOIL TESTS

When a Public Works Engineer determines that a corrosive conditions exists such as poor drainage or reactive soils, pipe and fittings shall be encased in polyethylene wrap as described in 9.4.7.

9.4.7 POLYETHYLENE ENCASEMENT

The outside surface of all ductile iron pipe and fittings shall be encased with polyethylene film in tube or sheet form unless otherwise approved by the City Engineer.

The polyethylene film shall be manufactured of virgin polyethylene material conforming to the requirements of ASTM Standard Specification D-1248-68-Polyethylene Plastics Molding and Extrusion Materials. The film shall have a minimum nominal thickness of 0.008" (8 mils) with a minus tolerance not exceeding 10 percent of the nominal thickness.

The polyethylene encasement shall prevent contact between the pipe and the surrounding backfill and bedding material but is not intended to be a completely air and watertight enclosure. Overlaps shall be secured by the use of polyethylene plastic tape, plastic string, or other materials capable of holding the polyethylene

encasement in place under light tension until backfilling operations are completed.

Repair any rips, punctures, or other damage to the polyethylene with polyethylene plastic tape or with a short length of polyethylene tube cut open, wrapped around the pipe, and secured in place.

Cover bends, reducers, offsets, and other pipe-shaped appurtenances with polyethylene in the same manner as the pipe.

When valves, tees, crosses, and other odd-shaped pieces cannot be wrapped practically in a tube, wrap with a flat sheet or split length of polyethylene tube by passing the sheet under the appurtenance and bringing it up around the body. Make seams by bringing the edges together, folding over twice, and taping down. Tape polyethylene securely in place at valve stem and other penetrations.

Provide openings for branches, service taps, blow-offs, air valves, and similar appurtenances by making an X-shaped cut in the polyethylene and temporarily folding back the film. After the appurtenance is installed, tape the slack securely to the appurtenance and repair the cut, as well as any other damaged areas in the polyethylene, with tape.

Where polyethylene-wrapped pipe joins an adjacent pipe that is not wrapped, extend the polyethylene wrap to cover the adjacent pipe for a distance of at least 2 feet. Secure the end with circumferential turns of tape.

All polyethylene-wrapped pipe, fittings, and valves shall be inspected for proper wrapping by the City Engineer or Public Works Director before backfilling operations.

9.4.8 PIPE INSTALLATION

All pipe shall be laid as specified in AWWA Standard for "Installation of Water Mains" C-600, except as modified herein and in special conditions approved by the City Engineer.

Tees, elbows, crosses, and reducers shall be used for changes in direction and outlets, unless otherwise specified on the approved detail drawings.

Anchors, thrust bolts and thrust blocks shall be placed at valves, elbows, tees, etc., as shown on the approved detail drawings or as directed by the City Engineer.

All ductile iron pipe installation shall proceed on a stable foundation, with joints closely and accurately fitted. Joints shall be clean and dry, and a non-toxic joint lubricant, as recommended by the pipe supplier, shall be applied uniformly to the mating joint and gasket surfaces to facilitate easy, positive joint closure. All push-on joints shall-have brass wedges as supplied by the pipe manufacturer, and

installed as per standard push-on joint specifications unless otherwise directed by the City Engineer.

All pipe shall be installed with uniform bearing under the full length of the barrel, with suitable excavations being made to receive pipe bells and fittings.

Select bedding material shall be compacted around the pipe to firmly bed the pipe in position. If adjustment of position of a pipe length is required after being laid, it shall be removed and rejoined as for new pipe installation. In addition to the above requirements, all pipe installation shall comply with the specific requirements of the pipe manufacturer.

Each pipe shall be laid true to line and grade and in such a manner as to form a close concentric joint with adjoining pipe and to prevent sudden offsets to the flow line. All joint offsets shall be made as specified in AWWA Standard for "Installation of Water Mains" C-600, except as modified herein and in special conditions approved by the City Engineer. As work progresses, the interior of the pipe shall be cleared of dirt and superfluous materials. Where cleaning after laying is difficult because of small pipe size, a suitable swab or drag shall be kept in the pipe and pulled forward past each joint immediately after jointing has set, and pipe shall not be laid when conditions of the trench or weather is unsuitable for such work. At all times when work is in progress, all open ends of the pipe and fittings shall be securely closed to the satisfaction of the City Engineer, so that no water, earth, or other substance will enter the pipe or fittings.

9.4.9 GRAVEL FOUNDATION FOR PIPE USED

Wherever the subgrade material does not afford a sufficiently solid foundation to support the pipe, the superimposed load, and where groundwater must be drained, the subgrade shall be excavated to such depth as may be necessary and replaced with crushed rock, gravel or other suitable material as approved by City Engineer, all such material shall be compacted into place.

Gravel for ductile iron pipe foundations shall be clean gravel with 100% passing a 1 1/2-inch screen and 5% passing a 3/4-inch sieve.

9.4.10 PIPE BEDDING

All pipes shall be protected from lateral displacement and possible damage resulting from impact or unbalanced loading during backfilling operations by being adequately bedded. A groove shall be excavated in the bottom of the trench to receive the bottom quadrant of the pipe. Before preparing the groove, the trench bottom shall be excavated or filled, with approved bedding material, and compacted to an elevation sufficiently above the grade of the pipe so that, when completed, the pipe will be true to line and grade. Bell holes and pipe fitting holes shall be excavated so that only the barrel of the pipe and bottom quadrant of the fitting receive bearing from the trench bottom.

Pipe bedding materials placed at any point below the midpoint of the pipe shall be deposited and compacted in layers not to exceed 8 inches in uncompacted depth. Deposition and compaction of bedding materials shall be done simultaneously and uniformly on both sides of the pipe. Compaction shall be accomplished with hand or mechanical compactors. All bedding materials shall be placed into the trench with hand tools or other approved method in such a manner that they will be scattered alongside the pipe and not dropped or pushed into the trench in compact masses. Bedding materials shall be loose earth, free from lumps, boulders or other debris; sand materials free from roots, sod, or other vegetable matter. All bedding materials shall be approved by the City Engineer.

In the event trench materials are not satisfactory for pipe bedding, modified bedding materials will be required. Modified bedding shall consist of placing compacted granular material on each side of and to the level of twelve (12) inches above the top of the pipe,

Modified bedding materials shall be graded as follows: 100% passing a 1-inch screen and 5% passing a No. 4 sieve. All modified bedding materials shall be approved by the City Engineer.

9.4.11 CLEANING AND FLUSHING

The Contractor shall take every precaution to remove dirt, grease and all other foreign matter from each length of piping before making connections in the field. After each section of piping is installed, it shall be thoroughly cleaned to remove rocks, dirt, and other foreign matter by washing, sweeping, scraping, or other method that will not harm the lining, or pipe.

Water required for flushing shall be furnished by the Contractor. All temporary connections for flushing and drainage shall be furnished, installed, and subsequently removed by the Contractor.

All open ends of pipes shall be bullheaded or plugged when workmen are not on the job or in the immediate area to prevent rocks or other foreign matter from entering the pipe.

All new water systems or extensions to existing systems shall be thoroughly flushed before being placed in service. Flushing shall be accomplished through hydrants, or end of the line blow-off assemblies.

9.5 PVC PIPE AND TUBING

9.5.1 GENERAL REQUIREMENTS

PVC pipe shall either be AWWA C900 or AWWA C909 for pipe 4-inches through 12-inches. PVC pipe 14-inches through 36-inches shall be AWWA C905 pipe.

Polyethylene tubing used in secondary water services shall be Polyethylene CTS (Copper Tube Size) tubing. Polyethylene CTS tubing shall be manufactured in accordance with the standard specification for Polyethylene (PEP plastic tubing as issued by the American Standard for Testing Materials under ASTM D 2737 and AWWA C901).

9.5.2 MATERIALS

Pipe for the transmission and distribution of water shall be manufactured in accordance with AWWA C900 (latest revision), "AWWA Standard for Polyvinyl Chloride (PVC) Pressure Pipe, 4-inch through 12-inch, for Water Distribution" or AWWA C909 (latest revision), "AWWA Standard for Molecularly Oriented Polyvinyl Chloride (PVCO) Pressure Pipe, 4-inch through 12-inch, for Water Distribution". The PVC pipe shall have a cast iron pipe equivalent outside diameter. PVC pipe 14 inches and larger shall be manufactured in accordance with AWWA C905 (latest revision), "AWWA Standard for Polyvinyl Chloride (PVC) Water Transmission Pipe, Nominal Diameters 14-inch through 36-inch". All PVC pipe 4-inch and larger shall be DR 18 with a working pressure of 150 psi. Pipe smaller than 4-inch shall be schedule 40 PVC.

All PVC pipe shall be purple in color.

All Polyethylene tubing shall be Polyethylene PE 3408, SDR 9 – 200 psi pressure rating, purple in color.

9.5.3 JOINTS

Joints shall be push or rubber gasket type. Lubrication shall be water soluble, non-toxic, non-objectionable in taste and odor imparted to the water, non-supporting of bacteria growth, and have no deteriorating effect on the PVC pipe or rubber gaskets.

9.5.4 FITTINGS

A. Mechanical Joint Fittings: Mechanical joint fittings shall conform to the provision of ANSI/AWWA C110/A21.10-82 or C153/A21.53-58.

9.5.5 LOCATOR WIRE AND WARNING TAPE

All pipe shall have 14AWG locator wire and metallic tape installed with it. The locator wire and tape shall be installed in the pipeline trench approximately 2 inches to 6 inches above the pipe. The locator wire shall be brought up in the valve boxes to permit connecting to when doing line location. The metallic tape shall be purple in color and shall read, "NON-POTABLE WATER".

9.5.6 PIPE INSTALLATION

All pipe shall be laid as specified in AWWA Standard for "Underground Installation of Polyvinyl Chloride (PVC) Pressure Pipe and Fittings for Water" C-605, except as modified herein and in special conditions approved by the City Engineer.

Tees, elbows, crosses, and reducers shall be used for changes in direction and outlets, unless otherwise specified on the approved detail drawings.

Anchors, thrust bolts and thrust blocks shall be placed at valves, elbows, tees, etc., as shown on the approved detail drawings or as directed by the City Engineer.

All PVC pipe installation shall proceed on a table foundation, with joints closely and accurately fitted. Joints shall be clean and dry; and a non-toxic joint lubricant, as recommended by the pipe supplier, shall be applied uniformly to the mating joint and gasket surfaces to facilitate easy, positive joint closure.

All pipe shall be installed with uniform bearing under the full length of the barrel, with suitable excavations being made to receive pipe bells and fittings.

Select bedding material shall be compacted around the pipe to firmly bed the pipe in position. If adjustment of position of a pipe length is required after being laid, it shall be removed and rejoined as for a new pipe installation. In addition to the above requirements, all pipe installation shall comply with the specific requirements of the pipe manufacturer.

Each pipe shall be laid true to line and grade and in such a manner as to form a close concentric joint with adjoining pipe and to prevent sudden offsets to the flow line. All joint offsets shall be made as specified in AWWA Standard for "Underground Installation of Polyvinyl Chloride (PVC) Pressure Pipe and Fittings for Water" C-605, except as modified herein and in special conditions approved by the City Engineer. As work progresses, the interior of the pipe shall be cleared of dirt and superfluous materials. Where cleaning after laying is difficult because of small pipe size, a suitable swab or drag shall be kept in the pipe and pulled forward past each joint immediately after jointing has set; and pipe shall not be laid when conditions of the trench or weather is unsuitable for such work. At all times when work is in progress, all open ends of the pipe and fittings shall be securely closed to the satisfaction of the City Engineer; so that no water, earth, or other substance will enter the pipe or fittings.

9.5.7 GRAVEL FOUNDATION FOR PIPE USED

Wherever the subgrade material does not afford a sufficiently solid foundation to support the pipe and the superimposed load, and where groundwater must be drained, the subgrade shall be excavated to such depth as may be necessary and replaced with crushed rock, gravel or other suitable material as approved by the City Engineer. All such material shall be compacted into place (American Fork Standard Drawing 15.22A).

Gravel for PVC pipe foundations shall be clean gravel with 100% passing a 1 ½-inch screen and 5% passing a ¾-inch sieve.

9.5.8 PIPE BEDDING

All pipes shall be protected from lateral displacement and possible damage resulting from impact or unbalanced loading during backfilling operations by being adequately bedded. A groove shall be excavated in the bottom of the trench to receive the bottom quadrant of the pipe. Before preparing the groove, the trench bottom shall be excavated or filled, with approved bedding material, and compacted (American Fork Standard Drawing 15.22A) to an elevation sufficiently above the grade of the pipe so that, when completed, the pipe will be true to line and grade. Bell holes and pipe fitting holes shall be excavated so that only the barrel of the pipe and bottom quadrant of the fitting receive bearing from the trench bottom.

Pipe bedding materials placed at any point below the midpoint of the pipe shall be deposited and compacted (American Fork Standard Drawing 15.22A) in layers not to exceed 8 inches in uncompact depth. Deposition and compaction of bedding materials shall be done simultaneously and uniformly on both sides of the pipe. Compaction shall be accomplished with hand or mechanical compactors. All bedding materials shall be placed into the trench with hand tools or other approved method in such a manner that they will be scattered alongside the pipe and not dropped or pushed into the trench in compact masses. Bedding materials shall be loose earth, free from lumps, boulders or other debris; and/or sand materials free from roots, sod, or other vegetable matter. All bedding materials shall be approved by the City Engineer.

In the event trench materials are not satisfactory for pipe bedding, modified bedding materials will be required. Modified bedding shall consist of placing compacted granular material on each side of and to the level of twelve (12) inches above the top of the pipe.

Modified bedding materials shall be graded as follows: 100% passing a 1-inch screen and 5% passing a No. 4 sieve. All modified bedding materials shall be approved by the City Engineer.

9.5.9 CLEANING AND FLUSHING

The Contractor shall take every precaution to remove dirt, grease and all other foreign matter from each length of piping before making connections in the field. After each section of piping is installed, it shall be thoroughly cleaned to remove rocks, dirt, and other foreign matter by washing, sweeping, scraping, or other method that will not harm the lining or pipe.

Water required for flushing shall be furnished by the Contractor. All temporary connections for flushing and drainage shall be furnished, installed, and subsequently removed by the Contractor.

All open ends of pipe shall be bullheaded or plugged when workmen are not on the job or in the immediate area to prevent rocks or other foreign matter from entering the pipe.

All new water systems or extensions to existing systems shall be thoroughly flushed before being p laced in service. Flushing shall be accomplished through hydrants or end-of-the-line blow-off assemblies.

9.5.10 LINE OF GRADE

All secondary water mains shall be laid with adequate grade to allow for yearly drainage of the lines, and proper fitting and emptying of the system. At locations where line and grade cannot be maintained, appropriate measures will need to be implemented to ensure the proper drainage of the lines: Permanent drains to storm drains or to ditches shall be installed at all low points in the pipeline and air-release stations shall be installed at all high points in the pipeline.

9.6 VALVES

Valves shall be of cast iron body, bronze-mounted, double disc, parallel seat, non-rising stem design with O-ring seals.

9.6.1 GATE VALVES

Gate valves shall conform to AWWA Specification C500. Unless otherwise shown or specified, valves shall be of mechanical joint connection design for buried service. Buried valves shall have 2-inch operating nuts. AR gate valves 12-inch and smaller shall be of resilient seat type. Valves shall have a minimum working pressure of 150 psi.

9.6.2 BUTTERFLY VALVES

Butterfly valves shall conform to AWWA Specification C504 Class 150B. Both valved ends shall be mechanical Joint per AWWA Specification C I I 1, and accessories (bolts, glands, and gaskets) shall be included.

9.6.3 VALVE BOXES

All buried valves shall be installed complete with a cast iron, 2 piece, slip top, 5-1/4 inch shaft valve box. The word "Water" shall be cast on the cover for all culinary valves. AR valve boxes located in streets shall be installed as nearly to street grade as possible.

9.7 FIRE HYDRANTS

9.7.1 GENERAL REQUIREMENTS

Fire Hydrants shall conform to AWWA C-502, "Fire Hydrants for Ordinary Water Works Service" and shall be designed for a working pressure of 150 psi. Hydrants shall be Mueller “Super Centurion 200” or Waterous “Pacer” or approved equal.

9.7.2 HYDRANT DETAILS

The hydrant shall be of the dry barrel design. All hydrants shall be so designed as to allow the flanges at sidewalk level to separate without material damage to the main barrel section when struck by a large object, such as a car. All hydrants shall have a minimum 6" barrel and be furnished with two 2-1/2 inch National Standard Thread Hose Nozzles and one 4-1/2 inch National Standard Thread Pumper Nozzle. All nozzles shall be furnished with a cap and gasket with attaching chain.

The drip valve shall be located near the bottom of the hydrant. It shall be positive in operation and shall work directly from the main stem. It must be so designed that all water will drain away from the working parts when the hydrant is closed.

Hydrant cover must be designed so as to be weather proof as possible. Provisions must be made for oiling, both for lubrication and to prevent corrosion. A reasonably tight fit should be made around the stem. On the cover an arrow and the word "OPEN" shall be placed in raised characters to indicate direction to turn to open the hydrant.

The hydrant must be marked with the name or particular mark of the manufacturer. The size of the hydrant shall also be cast in the barrel. All lettering to be above the ground or sidewalk flange.

9.7.3 AUXILIARY VALVE

All hydrants shall be supplied complete with a flange by mechanical joint end auxiliary gate valve with armor guard gasket, and shall be installed at the water main as outlined on approved construction drawings unless otherwise approved by the City Engineer. All buried auxiliary valves shall have 2-inch operating nuts unless otherwise specified.

9.7.4 VALVE BOXES

All buried auxiliary valves shall be installed complete with two piece, cast iron, slip type, 5 1/4-inch valve box. All valve boxes shall be carefully inspected for proper fit between each section, ring and lid, and shall be set to the grade with a concrete collar as shown.

9.7.5 HYDRANT INSTALLATION

All fire hydrants shall be installed with a 1 cubic yard gravel sump and concrete thrust blocking. As defined in Section 9.2. Concrete shall not be placed around

joints, bolts or drain holes. Cover all metal contact areas with a poly wrap material prior to concrete placement. All hydrants shall be installed with the upper safety flange at least 2 inches and not more than 6 inches above ground level. All hydrants shall be installed with the steamer nozzle facing the street unless otherwise approved by the City Engineer.

9.8 BACKFLOW PREVENTION DEVICES

Backflow prevention devices shall be installed on all culinary service connections in conformance with requirements of the Uniform Plumbing Code Chapter 10 (Appendix J). All testing, maintenance, and/or repair shall be performed by certified backflow assembly technicians.

9.9 CULINARY WATER LINE CONSTRUCTION NEAR SEWER OR WASTEWATER LINES (Applicable public health department criteria)

9.9.1 WATER/SEWER LINE HORIZONTAL SEPARATION

A culinary water main must be laid at least ten feet horizontally from any existing or proposed sewer or wastewater leach line. Separation distances shall be measured pipe edge to pipe edge.

Should local conditions prevent a lateral separation of ten feet, a culinary water main may be laid closer than ten feet to sewer lines (but not leach lines) provided:

A. The main is laid in a separate trench, or

B. The main is laid on an undisturbed earth shelf on one side of the sewer line trench, or

C. The main is laid in a sewer or drain line trench which has been backfilled and compacted not less than 95% of maximum laboratory density. (The density shall be determined in accordance with the procedures given by ASTM Standard D-690).

In each of the above cases, the bottom of the culinary water line shall be at least 18 inches above the top of the sewer line. At the same time, the culinary water line must be sufficiently buried to prevent freezing.

9.9.2 EXCEPTION TO HORIZONTAL SEPARATION

When it is impossible to obtain the proper horizontal and vertical separation as stipulated above, both the water main and sewer line shall be constructed of cast iron, ductile iron, galvanized steel or protected steel pipe having mechanical joints. Other types of joints of equal or greater integrity may be used at the discretion of the City Engineer. Thermoplastic pipe may be used provided mechanical or solvent weld pipe joints are used. These lines shall be pressure-tested to assure water tightness before backfilling.

9.9.3 CULINARY WATER/SEWER LINE CROSSINGS

Whenever culinary water mains must cross sanitary sewers, the water main shall be laid at such an elevation that the bottom of the water main is 18 inches above the top of the sewer. This vertical separation should be maintained for the portion of the water main located within ten feet horizontally of any sewer it crosses. The ten feet is to be measured as the perpendicular distance from the sewer line to the water line.

9.9.4 INABILITY TO PROVIDE VERTICAL SEPARATION

Where conditions prevent the minimum vertical separation as set forth above from being maintained, or when it is necessary for the culinary water main to pass under a sewer, both the culinary water main and the sewer line shall be constructed of cast iron, ductile iron, galvanized steel or protected steel pipe, having mechanical joints. Thermoplastic pipe may be used provided mechanical or solvent weld type joints are used. The mechanical joint pipe shall extend on each side of the crossing until the perpendicular distance from the sewer line to the culinary water line is at least ten feet. In making such crossings, it is preferable to center a length of culinary water main so that the joints will be equidistant from the sewer and as remote there from as possible.

Where a culinary water main must cross under a sewer, a vertical separation of at least 18 inches between the bottom of the sewer and the top of the culinary water main shall be maintained with adequate support for the larger sized sewer lines to prevent them from settling on and breaking the culinary water main.

In the case where a new culinary water line must be routed under an existing sewer line, and it is desired not to disturb the sewer line, the City Engineer may grant an exception to the above requirements. The designer must then propose a method for protecting the culinary line. Such a proposal must be deemed acceptable in writing by the City Engineer.

9.10 TESTING WATER LINES

9.10.1 GENERAL REQUIREMENTS

Any and all water lines that are replaced, installed, or repaired, to include fire hydrants, shall be tested and flushed as outlined in this section.

9.10.2 TESTING

Tests shall be made upon completion of system installation, replacement, repair, or any valved portion thereof All tests shall be made at the expense of the Contractor and in the presence of the City Engineer or the City Water Superintendent.

Lines shall be slowly filled with water venting off all air. If required, taps shall be provided at line high points to bleed off the air and after testing these shall be plugged. A minimum pressure 50% in excess of the maximum line operating pressure shall be maintained on the portion being tested for a minimum period of two hours, using hydraulic means to maintain the pressure. Maximum leakage during the test shall not exceed one half (1/2) gallon per inch of diameter per 1000 feet of pipe. Suitable means shall be provided by the Contractor for determining the quantity of water lost by leakage under the test pressure. No pipe installation will be accepted until the leakage is less than the allowable.

9.10.3 FLUSHING

After pressure testing all pipelines shall be flushed. Flushing shall be accomplished through hydrants or, if a hydrant does not exist at the end of the line, the Contractor shall install a tap of sufficient size to provide for a 2.5 foot per second flushing velocity in the line. The following is the flow quantity required to provide a 2.5 foot per second flushing velocity:

Pipe Size (in.)	Flow (gpm)
2	25
4	100
6	220
8	390
10	610
12	880
16	1567

9.11 DISINFECTION OF CULINARY WATER LINES

9.11.1 GENERAL REQUIREMENTS

All culinary water lines shall be disinfected by chlorination prior to use as outlined in this section.

9.11.2 CHLORINATION

After flushing, all culinary water lines shall be disinfected by chlorination. Chlorination shall provide a minimum of 25 ppm residual after 24 hours contact in the pipeline. This may be expected with an application of 50 ppm although some conditions may require more. Chlorine, in the form of 1% slurry of high test calcium hypochlorite (HTH, Perchloron, Pittchlor, etc.which are 70% available chlorine by weight) shall be fed into the pipeline in such a manner as to mix with the water flowing in the pipeline. (A 1% slurry results from mixing 1-pound of the calcium hypochlorite with 8.4 gallons of water.)

The following table provides information as to the required quantity of slurry to be used per 100 feet of pipe to provide a chlorine concentration of 50 ppm:

Pipe Size (in.)	Vol. of 100 ft. Length (gal.)	Req'd. Amount of Slurry (gal.)
1.5	9.2	0.07
2	16.3	0.12
2.5	25.5	0.18
3	36.7	0.26
4	65.3	0.47
6	147	1.05
8	261	1.87
10	408	2.92
12	588	4.2

During the process of chlorinating the pipeline all valves, fire hydrants, and other pipeline appurtenances shall be operated several times to provide sufficient contact with the chlorinating agent. Following chlorination, the water line shall be drained and thoroughly flushed and, if necessary, re-chlorinated until a satisfactory bacteriological test is obtained. After 24 hours of chlorination, the Contractor shall obtain a water sample, upon which the Contractor will have a bacteriological test performed. The lab will provide a copy of the test to the City. The Contractor shall pay the cost of the bacteriological test. Disinfection shall conform to the requirements of AWWA C651-86 (or latest edition).

SECTION 10

IRRIGATION SYSTEMS AND LANDSCAPING

10.1 IRRIGATION SYSTEMS - GENERAL DESCRIPTION

Unless otherwise specified, the construction of irrigation systems shall include the furnishing, installing and testing of all main line, paint of connection, lateral line, risers and fittings; and the furnishing and installing of sprinkler heads, automatic controllers, central wires (to valves), electrical control valves, back flow protection, excavation and back fill and all other work in accordance with applicable American Fork City Codes. Locations of all irrigation heads, shrub heads, etc., shall be subject to the approval of the American Fork Public Works Department.

The construction of irrigation systems shall include but not limited to the furnishing, installing and pressure testing of mains, and furnishing and installing of irrigation heads, gate valves, control valves, automatic valves, automatic controllers, and the electrical connection and any other products required to ensure an efficient and functioning irrigation system. The removal and/or restoration of existing improvements, excavation and backfill, and all other work shall be in accordance with American Fork City standards and specifications.

The contractor shall adequately protect the work, adjacent property, and the public, and shall be responsible for any damage, injury, or loss due to his acts or neglect.

The contractor shall, at all times during construction, maintain safe pedestrian ways around all areas of construction. This may require proper and adequate signs, fences, barricades or other approved devices as required by the Public Works Department.

The contractor shall not allow or cause any of the work to be covered or enclosed until it has been inspected, tested and approved by the Public Works Department. Should any of the work be enclosed or covered before inspection and test, the contractor shall uncover the work at his/her own expense and after it has been inspected, tested and approved shall make all repairs with like materials to bring the work to acceptable standards if necessary.

10.2 GENERAL REQUIREMENTS

10.2.1 ORDINANCES AND REGULATIONS

All local, municipal and state laws and rules and regulations governing or relating to any portion of this work are to be incorporated into and made a part of all plans and specifications and their provisions shall be carried out by the Landscape Architect/designer/Engineer and contractors. Anything contained in these specifications shall not be constructed to conflict with any of the ordinances and regulations of the City of American Fork. However, these specifications take precedence over the requirement of said rules and regulations when they describe materials, workmanship, or construction of a higher standard or larger size.

10.2.2 BONDING AND INSPECTION

The irrigation system and landscape planting will be bonded as part of the entire development project. Bond releases will be handled through the Public Works Department.

10.2.3 MATERIALS

Whenever any material is specified by name and/or number, such specifications shall be deemed to be used for the purpose of facilitation a description of the materials, and establishing quality. No substitution will be permitted unless approved by the Parks Department.

10.2.4 INSPECTIONS AND PROCEDURES

A. The irrigation contractor shall set up an inspection schedule with the Public Works Department. Prior to each inspection date, the contractor shall give twenty-four (24) hours notice to the Department.

B. In the event the contractor requests inspection of work and said work is substantially incomplete, the contractor shall be responsible for reinspection fees.

C. The developer, after installing the irrigation system, shall request from the City, the first final inspection and approval.

D. From the date the project is termed "satisfactory" by the inspector, the developer shall maintain, replace, and install the irrigation system for a period of thirty- (30) days.

E. At the end of one (1) year the City Public Works Department will, upon satisfactory inspection, release the contractor and developer from the one (1) year guarantee of the irrigation system and any other landscape items on the project.

F. The developers shall obtain written approval from the Public Works Department that the City has officially assumed maintenance and that all work has been performed satisfactorily.

10.2.5 RECORD DRAWINGS

The Landscape Architect/designer will furnish the Public Works Department with five (5) preliminary sets of blue line prints for review, showing all irrigation work required. After initial review by the City, the Landscape Architect/Designer/ Engineer shall make all noted corrections as discussed with staff. The Landscape Architect/designer/Engineer shall submit five (5) final sets of blueline prints.

Upon completion of installation the contractor/developer will submit to the Public Works Department an as-built set of plans. The City Public Works Department shall receive a corrected set of as-built plans prior to accepting the project.

10.3 EXCAVATION AND BACKFILL

Trenches for irrigation pipe (plastic, brass, and/or galvanized) irrigation lines shall be excavated either by hand or machine and shall be sufficient width to permit proper handling and installation of the pipe and fittings. The backfill shall be thoroughly compacted and evened off with the adjacent soil level. Selected fill dirt or sand shall be used if soil conditions are rocky or obstructive. Trenching depth shall be two (2) inches below normal trench depth to allow for proper bedding.

Fill dirt or sand shall be used in filling four (4) inches above the pipe. The remainder of the backfill shall contain no lumps or rocks larger than two (2) inches. The top six (6) inches of backfill shall be free of rocks over one (1) inch. Pipe depth for all plastic pipe shall be 18-24 inches on main lines and 12-18 inches on lateral lines with the appropriate fill as above.

10.4 PIPE AND TUBE

10.4.1 GENERAL REQUIREMENTS

All piping under paving shall be installed in Schedule 40 PVC sleeves. Piping under the road to the water meter box shall be ductile iron Class 51 pipe.

Piping under paving shall be installed by jacking, boring or hydraulic driving. Cutting or breaking of sidewalks and/or concrete work is not permitted unless no other alternative is possible and only as approved by the American Fork City Public Works Director. Piping shall be located in such a way that a minimum of pipe will be located under paving.

10.4.2 PLASTIC PIPE AND TUBING

Plastic pipe shall be extruded from PVC 1120-1220 compound and shall be so labeled. All PVC pipe shall be Schedule 40.

10.4.3 PLASTIC PIPE FITTINGS AND CONNECTIONS

All plastic pipe fittings shall be suitable for either solvent weld or screwed connection. Fittings shall be factory-assembled fittings or appropriate alternate. All fittings shall be Schedule 40 PVC, unless otherwise noted on City Standard detail drawings.

When connection is plastic to metal, Schedule 80 female adapters shall be used. The female adapter shall be hand tightened, plus one turn with a strap wrench. All threaded joints are to be wrapped with Teflon tape.

All PVC slip joints shall be primed prior to being glued. Burrs at cut ends shall be removed prior to installation to necessitate a smooth unobstructed water flow.

10.4.4 FLUSHING AND TESTING

After all new irrigation piping and risers are in place and connected, and all the necessary work has been completed prior to the installation of irrigation heads, control valves shall be opened and a full head of water used to flush out the system. Irrigation main lines shall be tested before backfilling for a period of not less than one hour, and shall show no leakage or loss of pressure.

10.4.5 WIRING

All wiring, pull box details shall be in accordance with the following:

A. National Electric Code

B. Utah State Uniform Building Code

C. Recommendations by the Public Works Department

D. All wiring to be continuous

E. If splices are necessary, they are to be in a valve box with a dry splice or approved equivalent.

F. All wiring under pavement or asphalt to be in conduit.

It shall be the Landscape Architect/designer's/Engineer's and contractor's responsibility to call out any conflict between the above listed codes.

10.5 IRRIGATION HEADS, GATE VALVES AND QUICK COUPLERS

All irrigation heads, valves and quick couplers shall be commercial grade brand products as currently deemed acceptable by American Fork City Public Works Department. All products must be approved prior to installation. This is done for standardization purposes and inventory control.

10.5.1 IRRIGATION HEADS

All irrigation heads shall be set to grade and perpendicular to the finished grades unless otherwise specified. Heads adjacent to curbs and walks shall be from 1/2" to 1" away from the curb or walkway. All nozzles on shall be tightened and adjusted for the proper radius, arc, and gallons.

10.5.2 GATE VALVES

All gate valves shall be resilient wedge with square key or domestic manufacture non-rising stem. 2001b water, oil, gas rated. All gate valves shall be installed with valve boxes. Six (6) inch or twelve (12) inch extensions shall be added when necessary to bring the valve boxes level with finish grade.

10.5.3 QUICK COUPLING VALVES

A quick coupling valve shall be installed on all main lines immediately after the backflow prevention device. In addition a quick coupling valve shall be installed at every valve box or valve box cluster (see Details). All quick coupler valves shall be installed in a 10" round valve box.

10.5.4 DRIP IRRIGATION

A. Use Rain Bird drip system irrigation products for all drip systems or an approved equal.

B. Do not exceed five hundred (500) lineal feet of tubing for any single circuit unless zones have been laid out and designed for more.

C. All supply lines are to be three quarter (3/4) inch schedule 40 PVC.

D. Run tubing parallel to contours when possible.

E. Install drain valve at low point in each zone.

F. Install air relief valve at high point in each zone.

10.5.5 QUICK COUPLING VALVE KEYS

All quick coupling valve keys shall have a hose swivel attached to the key. One key to be turned over to the Public Works Department at completion of the project.

10.5.6 IRRIGATION RISERS

Irrigations shall have an adjustable riser assembly (double swing joint) (see Details). Spray pop-up irrigation heads shall have a double swing joint riser constructed of funny pipe (swing pipe), spiral barb fittings and appropriate ells on the head side (see Details).

10.6 IRRIGATION CONTROLLER

Irrigation controller shall be pedestal or wall mounted, unless otherwise approved. All controllers shall be mounted on a stable wall, power rack, or a formed and constructed concrete based pedestal mount. All controllers shall be mounted in vandal proof and weatherproof boxes.

The contractor/developer is responsible for 110 electrical service. This service must be metered. This connection shall be inspected and approved by the City Public Works Department.

All 110 wires will be in conduit and buried at least 24 inches deep. All control wire will run in the main line trench and be taped to the main line every ten (10) feet.

All local, state and national codes shall take precedence in the furnishing and connecting a 110-volt electrical service to the controller.

10.7 ELECTRIC REMOTE-CONTROL VALVES

Valves shall be as specified on drawings and approved by the Public Works Department. Remote-control valves shall be installed in 17" x 11.75" valve box (Note: this is the minimum size). No more than two valves per box and valves must be positioned such that the tops-of the valve can be removed without removing the valve box.

10.8 CONNECTION

10.8.1 CONNECTION FEE

The contractor/developer shall pay the appropriate American Fork City connection fee for the water meter, prior to any construction except as waived.

10.8.2 CONNECTION TO MAIN LINE

Developer/contractor shall be responsible for constructing the tap to the City water main, including all applicable labor, materials, road cuts and road cut permits.

10.8.3 BACKFLOW PREVENTION

To comply with the regulations of the State of Utah, which prohibits unprotected cross connections between the public water supply and any unapproved source or connection, the Water Superintendent requires the installation of approved backflow prevention devices by and at the contractor's expense. The degree of hazard and the type of backflow prevention device required to abate the cross connection shall be determined by the Water Superintendent. Maintenance and testing of the device shall be by the American Fork City Water Department. The contractor shall be responsible for repairs and cost of repairs during the one (1) year guarantee period.

10.8.4 BACKFLOW REQUIREMENTS, INSPECTIONS, AND TESTS

Backflow prevention devices shall be selected from a list of approved devices set forth by the Utah Division of Public Water Supplies. Double Check Valve Assemblies (DCA) and Reduced Pressure Assemblies (RP) will be the only

accepted styles of backflow prevention devices. This selection shall then be approved by the American Fork City Water Department.

Each device shall be installed in compliance with Utah State Plumbing codes and Utah Division of Public Water Supplies regulations.

Each device shall be tested within ten (10) days of installation and at least once yearly thereafter by a backflow technician licensed by the State of Utah. The location of each device shall be reported to the American Fork City Water Department in writing within ten (10) days of installation.

10.8.5 LOCATION OF BACKFLOW PREVENTION

Location of backflow prevention installation shall be approved by American Fork City Public Works Department prior to installation.

10.8.6 DOUBLE CHECK VALVE ASSEMBLY (DCA) (See Details)

A. The DCA shall be readily accessible for testing, repair, and maintenance.

B. DCA's are to be installed in a pit, the DCA shall be installed with a minimum of 12-inch clearance between all sides of the vault including the floor, and roof, or ceiling and must be approved by the American Fork City Water Department.

C. The DCA shall be maintained as an assembly.

D. The DCA shall be installed in a horizontal position only.

10.8.7 REDUCED PRESSURE ASSEMBLY (RP)

A. The assembly shall be protected from freezing and vandalism.

B. The bottom of the RP assembly shall be a minimum of 12 inches above the ground or floor.

C. The body of the RP shall be a minimum of 12 inches from any walls, ceilings, or encumbrances and shall be readily accessible for testing, repair, and maintenance.

D. RP’s shall not be installed in a pit.

E. The relief valve on the RP shall not be directly connected to any waste disposal line, including sanitary sewer, storm drains, or vents.

10.9 PLANTING SPECIFICATIONS

NOTE: All irrigation work shall be inspected and approved by the Public Works Department. Prior to commencing o f any landscaping work in this section, approval shall be obtained by the developer in writing from the Public Works Department.

10.10 LANDSCAPING - SCOPE OF WORK

Plant totals on the plant list shall be consistent with the illustrated quantities on the plans. The Public Works Department shall approve all sizes and quantities.

The contractor shall, at all times during construction, maintain safe pedestrian ways around all areas of construction. This may require proper and adequate signs, fences, barricades or other approved devices as required by the Public Works Department.

10.11 DRAWINGS AND SPECIFICATIONS

The owner/contractor shall furnish the Public Works Department with five (5) preliminary sets of blueline prints, showing all planting and concrete work required. After initial review, and corrections discussed and noted, the owner/contractor shall submit five (5) final sets of blueline prints.

These plans shall include a plant schedule identifying botanical name, common name, quality, size, spacing and farm or plant materials (balled and burlaped, container, seed, sod, etc.)

In the event of any changes in locations other than shown, the contractor shall clearly notify the Public Works Department and indicate such by signature of contractor and authorized city official such changes on all sets of plans.

10.12 OBSTRUCTIONS BELOW GROUND

Prior to excavation for planting or the driving or placing of stakes, the contractor shall locate all electrical cables, conduits and other utility lines so that proper precautions may be taken not to disturb or damage such improvements. In the event of a conflict between such utility lines and plant locations, the Contractor/Developer shall promptly notify the Public Works Department. Failure to follow this procedure places the responsibility and expense upon the contractor for making any and all repairs.

Remove rock, road base, or other underground obstructions, except utility lines or portions of project construction, to a minimum of 6-inch (6”) depth to permit proper installation of lawns and planting.

10.13 SPACING

Spacing shall be noted in plant schedule and installed accordingly.

10.14 PLANTS TO BE FURNISHED

The owner/contractor shall furnish plants as listed on the drawings and herein specified. All quantities and sizes shall be as follows:

1. All shrubs shall be a minimum 5-gallon size unless written approval is obtained.

2. All trees shall be a minimum of 2"caliper measured 20 inches above the planted ground level.

3. All evergreen trees 6 to 7 feet.

The developer shall pay the cost of installation of parkway trees. Parkway trees shall be installed on all streets as required by Planning and Zoning.

All plants delivered to the site must be first class representatives of their species or varieties, free from disfiguration, with well-developed branch systems and vigorous and fibrous root systems. Plants not conforming to these requirements must be removed, whether in place or not and replaced with acceptable plant material.

All material shall conform to the guidelines established by the current American Standard for nursery stock, published by the America Association of Nurserymen.

All plant material must meet the specifications of federal, state and county laws requiring inspection for plant disease and insect infestation. Tag all plants with name and size of the plants in accordance with Standard of Practice recommended by the American Association of Nurserymen. Final determination of plant species or variety will be made by the City Public Works Department.

Root conditions of plants furnished in containers may be determined by the Public Works Department. The selection of plants shall be made by the landscape architect/designer with final approval reserved by the Public Works Department and any plant rendered unsuitable as samples will not be accepted by the City and must be replaced at the owner's/contractor's expense.

10.15 SUBSTITUTIONS

No substitutions for the indicated plant materials will be permitted unless approved in advance by the Planning and Zoning Commission and Public Works Department. Any substitutions shall be of a quality and size equal to that specified on the plans. Except for the variations so authorized, all substitute plant materials shall conform to the requirements of these specifications.

10.16 FINISH GRADING AND SOIL PREPARATION

Finish grading shall consist of the following:

1. Planting areas shall conform to the uniform grade by floating or hand raking.

2. It shall be the responsibility of the landscape contractor to insure proper drainage. Surface drainage shall be modeled to facilitate the natural runoff of water. Low spots and pockets must be graded to drain properly. Proper drainge from building, walls, etc. shall nost be impeded in any way.

3. Finish grade of all lawn areas shall be 1/2" below grade of adjacent pavement of any kind. Roll all lawn areas with a water fill roller to obtain uniform compaction and level surfaces (50 pounds minimum weight).

4. Proper drainge from building, walls, etc. shall nost be impeded in any way.

5. A minimum of four inches topsoil shall be provided and installed in all landscape areas.

10.17 PLANTING

SOD: Sod may be accepted 30 days after inspection and at the completion of at least four (4) cuttings (once every 7 days). If the project has not been accepted, the developer shall be required to continue maintenance until project is accepted.

1. Prepare lawn areas as specified under soil preparation. Slope all areas to drain according to the Architect's drawings, and Public Works Department's approvals.

2. Rake these areas as specified under soil preparation, until the surfaces are smooth and uniformly fine texture immediately prior to planting the turf.

3. Finish grade of all sod areas shall be such that after the sod is installed, finish grade will be between 1 to 1.5 inches below the sidewalk or adjacent pavement areas.

4. Roll sod bed after grading with a water roller (50 pounds minimum weight).

5. Apply 16-16-8 commercial fertilizer at the rate of 10 pounds per 1,000 square feet.

6. Lay sod with staggered seems.

7. After sod has been laid, water soil then roll sod with water roller with 50-pound minimum weight to level sod and insure positive contact with soil.

10.18 GROUND COVER

Prepare ground cover areas as specified under soil preparation, including commercial fertilizer (16-16-8) at the rate of 15 pounds per 1,000 square feet.

10.19 TREES AND SHRUBS

10.19.1 Plant to their normal depth and puddle with a running stream of water from a hose. Prepare planting holes and stake the trees as shown on the standard tree staking detail.

10.19.2 The spacing and species of trees shall conform to the landscape plan and any additional requirements of the Planning and Zoning Commission.

10.19.3 Location: Trees shall be kept not less than:

A. Thirty- (30) feet back of beginning of curb returns at any street intersection.

B. Twenty (20) feet from lamp standards and power poles

C. Ten (10) feet from fire hydrants.

D. Five (5) feet from service walks and driveways.

E. Five (5) feet from water meters.

10.19.4 All containers, wire baskets, etc., shall be removed from trees and shrubs prior to planting. All B & B stock shall have the bailing twine removed and burlap folded down below ground level.

10.19.5 Any trees or shrubs planted too deep will not be accepted. Root ball should be approximately 2 inches above finished grade.

10.20 STAKING

Stake all trees at the time of planting. (See specification drawings for details.)

10.21 MAINTENANCE

Plant maintenance work shall consist of watering, weeding, caring for plants, edging and mowing the lawn, fertilizing, and performing the following plant establishment work:

1. The entire project shall be satisfactorily maintained for a period of thirty- (30) days and the completion of at least four (4) mowing (once every 7 days). The maintenance period will begin when all items of work have been completed as specified in the foregoing articles and to the satisfaction of the Public Works Department 30 days after inspection. If the project is not accepted, the developer shall be required to continue maintenance until the project is accepted.

2. The lawn and turf shall be completely irrigated according to the approval of the Public Works Department until written acceptance of work. Water shall be applied to all lawn areas by means of the irrigation system, and the areas shall be kept moist, but not wet, until the first cutting of grass. After first cutting, water lawn to maintain a thriving condition.

3. Lawns shall be kept green and vigorously growing at all times.

4. If the project has not been accepted at the end of the 30-day maintenance period, an application of fertilizer, 16-16-8 % Fe. shall be applied as directed on the 35th and 60th day, and every 45 days thereafter until accepted and approved by the Public Works Department.

5. At completion of maintenance period, all areas included sidewalks and gutters shall be clean and free of debris and weeds. All plant materials shall be live, healthy, and free of infestations. The contractor shall obtain written release from the Public Works Department before ending maintenance obligations.

10.22 INSPECTIONS AND PROCEDURES

The contractor shall comply with the following:

1. Contractor shall give 24 hours notice for all inspections.

2. A tree and shrub spotting inspection shall be called when plant material is on the site and ready to be located.

3. The developer, after installing the irrigation system and landscaping, shall request from the City, inspection and approval.

4. If the irrigation system and landscaping are satisfactory, the developer shall be granted written approval from the City.

5. The developer shall maintain said irrigation system and landscaping until accepted by the City.

6. At the end of the one (1) year period, the City will inspect the irrigation system and landscaping and if it is satisfactory, the City will release the contractor/developer from guarantee.

7. At the end of the one (1) year period, if either the irrigation system or landscaping is found unsatisfactory, the developer shall be responsible for all required corrections. Corrections may include either extension of the one (1) year period, re-installing irrigation parts and larger plants, or both.

8. The bonds posted for construction of the approved plan, shall not be exonerated until the maintenance of landscaping has been assumed by the City and the guarantee period has been satisfied.

SECTION 11

INSTALLATION OF UTILITY CONDUITS

11.1 GENERAL DESCRIPTION

Developers shall be responsible to install utility conduits at locations approved by utility companies.

11.2 EXCAVATION

Excavation shall be at depth and standards of utility companies.

11.3 CONDUIT PIPE

Pipe used for conduits shall be approved by each utility company. The location of conduits shall be established by utility company engineers. Conduits shall have bends attached to each end and placed vertically out of the ground for location verification. Conduits within street right-of-ways shall have a minimum of 24" cover below finished street grade.

SECTION 12

PORTLAND CEMENT CONCRETE

12.1 GENERAL DESCRIPTION

The work shall consist of furnishing, forming, placing, finishing and curing Portland Cement Concrete as required.

12.2 MATERIALS

12.2.1 PORTLAND CEMENT

Portland Cement shall conform to the requirements of ASTM Specification C150, unless otherwise specified type II cement shall be used.

12.2.2 WATER

Water shall be clean and free from damaging amounts of oil, salt, acid, alkali, organic matter or other deleterious substances.

12.2.3 AIR-ENTRAINING ADMIXTURES

Air-Entraining Admixtures shall conform to ASTM designation C150 and C260, except that the relative durability factor in the freezing and thawing test shall be no less than 95. Admixtures containing chloride ions shall not be used in prestressed concrete or in concrete containing aluminum or galvanized embedment.

12.2.4 USE OF CALCIUM CHLORIDE

Calcium chloride may not be used unless written approval by the City Engineer or Public Works Director. No more than two percent (2%) of calcium chloride can be used, and no calcium chloride shall be used in reinforced slab structure.

12.2.5 FLY ASH OR OTHER POZZOLANS

Fly ash or other pozzolans may be used only upon approval by the City Engineer. They shall conform to ASTM C618. In no case shall more than fifteen percent (15%) of the Portland Cement be replaced by an equal weight of Pozzolan.

12.2.6 CURING COMPOUND

Curing compound shall meet the requirements for ASTM C309. The compound shall be applied in accordance with the manufacturer’s recommendations; and applied as soon as possible after final finishing. Transparent curing compounds shall meet the following requirements: the compound shall be a liquid that is free from suspended matter at the time of application. It shall be sufficiently low in

viscosity to result in an even, uniform coating when applied by spraying. The compound shall be sufficiently transparent and free from permanent color to result in no pronounced change in color from that of the natural concrete at the conclusion of the curing period. The compound shall, however, contain a dye of color strength sufficient to render the film distinctly visible on the concrete for a period of at least four (4) hours after application, and shall meet the requirements of ASTM C309 1-0 Class B. Red pigment shall be used that can be readily seen by the inspector.

12.2.7 PREFORMED EXPANSION JOINT FILLER

Preformed expansion joint filler shall conform to the requirements of ASTM D-1752 or ASTM D-994.

12.2.8 AGGREGATES

Aggregates shall conform to tentative specifications for concrete aggregates, ASTM C-33. The aggregates shall be free from substances which are chemically active relative to hydrated cement.

A. **COARSE AGGREGATE**

A coarse aggregate shall consist of hard durable particles of a mixture of crushed and natural aggregate, and shall be subject to the following limitations:

1) Deleterious substances shall not exceed:

		% by Wgt.
1.	Soft Fragments	3.0
2.	Coal Lumps	1.0
3.	Clay Lumps	0.5
4.	Material passing #100 sieve	1.5
5.	Organic Material	0.1
6.	Total for any or all of sieve	3.0

2) Loss on abrasion by Los Angeles Abrasion Test not more than forty percent (40%) by weight.

3) Loss on exposure to five cycles of sodium sulfate soundness test, not more than eight percent by weight.

The maximum size of aggregate to be used shall not exceed one and one-half (1 1/2) inches in terms of the size definition contained in ASTM Standards, except that the maximum size shall not exceed: a) 1/5 the narrowest dimension between sides of forms, nor b) 1/3 the depth of the slabs, nor c) 3/4 the minimum clear spacing between individual reinforcing bars or wires, bundles of

bars, or pre-stressing tendons or ducts. Coarse aggregate shall be well-graded to produce as dense a mixture as practical.

B. **FINE AGGREGATE**

1) Fine aggregate shall consist of clean, hard, durable, particles of natural sands, subject to the following limitations:

1.	Soft Fragments	3.0%
2.	Coal	1.0%
3.	Material passing #200 sieve	3.0%
4.	Micaceous or flaky particles	3.0%
5.	Total for any or all of above	5.0%

2) Organic or colormetric test using sodium hydroxide shall result in a color not darker than Number 2 in the accepted range.

3) Loss on exposure to five cycles of the sodium sulfate soundness test shall not exceed eight percent (8%) by weight.

Fine aggregate shall be well graded and meet ASTM C-33.

12.2.9 METAL REINFORCEMENT AND EMBEDDED ITEM

Metal reinforcement shall conform to the requirements of ACI 318-77 section 3.5 and shall be of the sizes and grade specified in the plans. Reinforcing steel shall be clean and free from rust, scale, paint, grease or other foreign matter which might impair the bond.

A. **FABRICATION**

Reinforcement bars shall be cut and bent in compliance with ACI standard code (ACI 318 later edition) Section 7.1. Bars shall not be bent, heated or straightened in a manner that will injure the material. Reinforcement with kinks, cracks, or improper bends will be rejected.

B. **PLACEMENT**

Reinforcement shall be stable and secure by wiring or other approved means which will prevent any displacement during the placing of concrete. Tack welding or welding of crossing bars shall not be allowed. The Engineer or Inspector must approve the site and reinforcement prior to the placing of concrete. Reinforcement shall be placed so as to meet the requirements of ACI standard code (ACI 318 latest edition), section 7.7.

The developer/contractor shall use concrete or steel chairs for holding the steel away from the subgrade, and spreader or other type of bars for securing the steel in place. The spreader bars shall not be less than 3/8

inch in diameter. Reinforcement shall be clean; any rust, oil, mortar, dirt, etc., shall be removed before placing of concrete

C. **EPOXY COATED REINFORCING STEEL**

Ensure that epoxy coating applicator has concrete reinforcing steel, institute (CRSI) fusion bonded epoxy coating applicator plant certification. Only those bars required by the approved plans shall be coated. Bent bars shall be coated after bending. Epoxy Coated Bars that are to be cut in the field shall be either sawed or sheared but shall not be flame cut. The sawed or sheared end and all other damaged coating shall be repaired using a specified patching or repair material approved by the manufacture for epoxy coating repair.

Epoxy Coated Bars shall be handled and stored in a manner to prevent damage to bars or coating. All systems for handling coated bars shall have padded contact areas wherever possible. All bundling bands shall be padded and all bundles shall be lifted with. strong back, multiple supports or a platform bridge so as to prevent bar to bar abrasion due to sagging in the bar bundle. The bars or bundles shall not be dropped or dragged.

12.2.10 STORAGE OF MATERIALS

A. STORAGE OF CEMENT AND AGGREGATES

Cement and aggregates shall be stored in such a manner as to prevent deterioration or intrusion of foreign matter.

B. **DETERIORATED OR CONTAMINATED MATERIAL**

Any material that has deteriorated or has been contaminated shall not be used for concrete.

C. **STORAGE OF STEEL REINFORCEMENT**

Steel reinforcement stored at the site of the work shall be stored above the ground surface on platforms, skids or other supports and shall be protected from dirt, mechanical injury and corrosion.

12.3 STRENGTH REQUIREMENTS

12.3.1 REQUIRED AVERAGE STRENGTH

Unless otherwise specified, F’c (28 day strength) shall be 4,000 psi for flatwork or for reinforced concrete, and 2500 psi for thrust blocks anchors or mass concrete. Concrete minimum strength per ACI 301.

12.3.2 REJECTION OF CONCRETE ON THE BASIS OF STRENGTH

Rejection of concrete on the basis of strength shall be considered if: a) the average of any three consecutive strength test falls below F'c or b) any individual strength falls below 500 psi less than F’c.

In the event of such occurrence the engineer shall investigate the concrete in question as to strength and durability requirements and if the adequacy of the concrete remains in doubt such concrete may be required to be replaced at no expense to the city. Investigation of low strength concrete test results in reinforced concrete structures shall conform to ACI 318-77 section 4.8.4. Should load tests be required to determine strength, the load tests shall be carried out at the expense of the contractor/developer.

12.3.3 STRENGTH TEST PROCEDURES

Samples for strength tests shall be taken in accordance with ASTM C31, "Method of Making Curing Concrete Test Specimens in the Field," ASTM C39, "Method of Test for Compressive Strength of Cylindrical Concrete Specimens," and ASTM C142, "Method of Obtaining and Testing Drilled Cores and Sawed Beams of Concrete."

The average strength of the concrete shall be verified based on the “strength test” in which the average strength of three standard cylinders is determined. The cylinder strength shall be determined at 28-days. One strength test shall be made for the first 15-yards of concrete poured and for each additional 50-yards of concrete placed.

When the average of the strength test shall show strength below that require, the concrete may be subject to rejection. The contractor may elect to have made an alternate strength test on three core samples obtained in accordance with AASHTO designation T-24. The City Engineer or Public Works director will determine the location, in the particular pour in question, where the cores will be taken. They shall be tested as soon as practicable under his supervision. All costs for securing the testing will be paid by the Contractor/Developer or ready-mix supplier.

12.4 AIR CONTENT AND CONSISTENCY

12.4.1 AIR-ENTRAINMENT

Concrete that after curing will be exposed to freezing temperatures while wet shall contain entrained air within the following limits:

Normal Maximum Aggregate Size, in.	Total Air Content Percent by Volume Per Cubic Foot
3/8	6 to 9
½	5 to 8
¾	4 to 8
1-1 ½	3.5 to 6.5

12.4.2 CONSISTENCY

Unless otherwise specified in these specifications, unreinforced concrete flat work shall have a slump range of 1 to 3 inches, reinforced concrete shall have a slump range of 2-4 inches unless super plasticized and mass concrete shall have a slump range of 2-6 inches.

12.4.3 REJECTION OF CONCRETE DUE TO INCONSISTENCY OR AIR ENTRAINING

Should air-entrainment fall below the minimum value set as determined from two or more tests in a batch, the City may reject such concrete. Once the "job mix," as specified in section 5, has been established and the slump requirements are known, if slump measurements are inconsistent with the mix, the engineer may reject the concrete if the adequacy of the batch is in question. Inconsistency shall be based on at least two slump tests from a load with the slump falling more than 2 inches below the set slump for the "mix" on both tests.

The first slump test will be taken after the first yard of concrete has been placed. If this test fails a second test will be taken immediately after.

12.5 DESIGN OF CONCRETE MIX

The proportions of the aggregates shall be such as to produce a concrete mixture that will work readily into the corners and angles of the forms and around reinforcement when consolidated, but will not segregate or exclude free water during consolidation. Prior to placement of concrete, the Developer/Contractor shall furnish the Engineer/ Public Works Representative for approval, a statement of the materials and mix proportions (including admixtures, if any) he intends to use. The statement shall include evidence satisfactory to the Engineer/Public Works Representative that the materials and the proportions will produce concrete conforming to this specification. The materials and proportions so stated shall constitute the "job mix". After a job mix has been approved, neither the source, character of grading the aggregates nor the type or brand of cement or admixture shall be changed without prior notice to the Engineer/Public Works Representative.

12.6 INSPECTION AND TESTING

The City Engineer or his representative shall have free entry to the construction site, or plant and equipment furnishing concrete under the contract. Proper facilities shall be provided for the engineer to inspect materials, equipment and processes and to obtain samples of the concrete. All tests and inspections will be conducted so as not to interfere unnecessarily with production and delivery of the concrete.

12.7 HANDLING AND MEASUREMENT OF MATERIALS

Materials shall be stockpiled and batched by methods that will prevent segregation or contamination of aggregate and ensure accurate proportioning of the ingredients of the mix.

Cement and aggregate shall be measured as follows:

12.7.1 CEMENT

Cement shall be measured by weight or in bags of 94 pounds each. When cement is measured in bags, no fraction of a bag shall be used unless weighed.

12.7.2 AGGREGATE

Aggregates shall be measured by weight. - Mix proportions shall be based on saturated, surface-dry weights. The batch of each aggregate shall be the required saturated, surface-dry weight plus the weight of the surface moisture it contains.

12.7.3 WATER

Water shall be measured, by volume or by weight, to an accuracy within one percent of the total quantity of water required for the batch.

12.7.4 ADMIXTURES

Admixtures shall be measured within a limit of accuracy of three percent.

12.8 MIXERS AND MIXING

Concrete shall be uniform and thoroughly mixed when delivered to the work site. Variations in the slump of more than 1 inch within the batch will be considered evidence of inadequate mixing and shall be corrected by increasing mixing time or other means.

For stationary mixtures, after all cement aggregate and water are in the mixer drum, the mixing time shall not be less than 1 1/2 minutes. Unless otherwise specified, volumetric batching and continuous mixing at the construction site will be permitted if approved by the City. The batching and mixing equipment shall conform to the requirements of ASTM C685 and shall be demonstrated prior to

the placement of concrete, by tests with the job mix, to produce concrete meeting the specified proportioning and uniformity requirements. Concrete made by this method shall be produced, inspected, and certified in conformance with Sections 6, 7, 8, 13 and 14 of ASTM Specification C685.

No water in excess of the amount specified in mix design for the job mix shall be added to the concrete during mixing or hauling or after arrival at the delivery point.

12.9 FORMS

Forms shall be of wood, plywood, steel or other approved material and shall be mortar tight. The forms and associated false work shall be substantial and unyielding and shall be constructed so that finished concrete will conform to the specified dimensions and contours. Form surfaces shall be clean, smooth and free from holes, dents, sags or other irregularities. Forms shall be coated with a nonstaining form oil before being set into place. Care shall be taken to prevent oil from getting on reinforcement or anchors. Reinforcement or anchors shall be clean before placing of concrete.

Metal ties or anchors within the forms shall be equipped with cones, she-bolts or other devices that permit their removal to a depth of at least one inch without injury to the concrete. Ties designed to break off below the surface of the concrete shall not be used without cones.

All edges that will be exposed to view when the structure is completed shall be chamfered by placing molding in the forms, unless finishing with molding tools.

12.10 CONVEYING CONCRETE

When the air temperature is 80° or greater, a maximum time of 45 minutes will be allowed from the time the cement mix is added to the concrete until the concrete mix is discharged from the carrier. When the temperature is less than 80°F, a maximum time of 90 minutes will be allowed from the time the water is added to the concrete mix until the concrete mix is discharged from the carrier. The concrete shall be conveyed from the mixer to the forms as rapidly as practicable by methods that will prevent segregation of the aggregates or loss of mortar. Concrete shall not be dropped more than five feet vertically unless suitable equipment is used to prevent segregation.

12.11 PLACING

Concrete shall not be placed until the subgrade, forms and steel reinforcement have been inspected and approved by the City.

The concrete shall be initially placed as closely as possible to its final position in the forms and shall be worked into the corners and angles of the forms and around all reinforcement and embedded items in a manner to prevent segregation of aggregates.

Unless otherwise specified, slab concrete shall be placed to the design thickness in one continuous layer. Formed concrete shall be placed in horizontal layers not more than 20 inches thick. Hoppers and chutes, pipes or concrete pumps shall be used as necessary to prevent splashing of mortar on the forms and reinforcing steel above the layer being placed.

Immediately after the concrete is placed in the forms, it shall be consolidated by spading, hand tamping or vibration as necessary to insure smooth surfaces and dense concrete. Each layer shall be consolidated to insure monolithic bond with the preceding layer. If the surface of a layer of concrete in place sets to a degree that it will not flow and merge with the succeeding layer when spaded or vibrated, the developer/contractor shall discontinue placing concrete and, shall make a construction joint in accordance with Section 12.12.

If placing is discontinued when an incomplete horizontal layer is in place, the unshed end of the layer shall be formed by a vertical bulkhead at a location approved by the Engineer.

No concrete flat work shall be placed or finished in the rain or snow.

12.12 JOINTS

12.12.1 CONSTRUCTION JOINTS FOR STRUCTURES

Construction joints shall be installed as shown on the drawings. If construction joints are needed which are not shown on the drawings, they shall be placed in locations approved by the Engineer.

Where a feather edge would be produced at a construction joint, as in the top surface of a sloping wall, an insert form shall be used so that the resulting edge thickness on either side of the joint is not less than 6 inches.

In walls and columns, as each lift is completed, the top surfaces shall be immediately and thoroughly protected from any condition that might adversely affect the hardening of the concrete.

Steel tying and form construction adjacent to concrete in place shall not be started until the concrete has cured at least 12 hours. Before new concrete is deposited on or against concrete that has hardened, the forms shall be kept moist for at least one hour prior to placement of the new concrete.

12.12.2 EXPANSION AND CONSTRUCTION JOINTS FOR STRUCTURES

Expansion and contraction joints shall be made only at locations shown on the drawings.

Exposed concrete edges at expansion and contraction joints shall be carefully tooled or chambered, and the joints shall be free of mortar and concrete. Joint filler shall be left exposed for its full length with clean and true edges.

Preformed expansion joint filler shall be held firmly in the correct position as the concrete is placed.

When open joints are specified, they shall be constructed by the insertion and subsequent removal of a wooden strip, metal plate or other suitable template in such a manner that the corners of the concrete will not be chipped or broken. The edges of open joints shall be furnished with an edging tool prior to removal of the joint strips.

12.12.3 CONSTRUCTION JOINTS FOR SIDEWALKS

Sidewalks shall have contraction joints at intervals of 10-feet (maximum), which joints shall be approximately 3/16- inch wide and be approximately 25% of the total slab thickness. In addition, ½ -inch expansion joints shall be provided at 50-foot intervals and at locations where sidewalks adjoin curbs or existing sidewalks, driveways, or aprons. Expansion joints shall be provided at 4-foot intervals where manholes, valve boxes, or meter boxes are located within a sidewalk.

12.12.4 CONSTRUCTION JOINTS FOR CURB AND GUTTER

Curb and gutter shall be cut into lengths of 10-feet (maximum) by the use of 1/8 – inch steel division plates of the exact cross section of the curb and gutter. Also, ½-inch expansion joints shall be provided at curb and gutter radii where the curb and gutter abuts a solid object and at intervals not to exceed 50-feet unless otherwise specified by the City engineer or Public Works Director.

Where curb and gutter are placed by slipform methods, the contraction joints every 10-feet may be provided by cutting into the fresh concrete to a minimum depth of 1-1/2-inches to create a plane of weakness. The edges of such jonts shall be rounded to provide a neat workman-like appearance. Expansion joints will be required at adjacent pavement, sidewalk, radius points, or structures.

12.13 WATER STOPS

Water stops shall be held firmly in the correct position as the concrete is placed. Joints in metal water stops shall be soldered, brazed or welded. Joints in rubber or plastic water stops shall be cemented, welded or vulcanized as recommended by the manufacturer.

12.14 FINISHING FORMED SURFACES

Immediately after the removal of the forms:

1. All fins and irregular projections shall be removed from exposed surfaces.

2. On all surfaces, the holes produced by the removal of the form ties, con bolts, and she-bolts shall be cleaned, wetted and filled with a dry-pack mortar consisting of one part Portland Cement, three parts sand that will pass a #16 sieve, and water just sufficient to produce a consistency such that the filling is at the point of becoming rubbery when the material is solidly packed.

12.15 FINISHING UNIFORMED SURFACES

All exposed surfaces of the concrete shall be accurately screened to grade, then float finished, and broomed lightly, unless otherwise specified. Finishing shall be delayed until concrete has reached its initial set and stopped bleeding.

Excessive floating or troweling of surfaces shall not be permitted.

The addition of dry cement or water to the surface of the screened concrete to expedite finishing shall not be permitted.

Joints and edges on unformed surfaces that will be exposed to view shall be chamfered or finished with molding tools.

12.16 CURING

Immediately after final finishing, all surfaces which are exposed to the air shall be coated with curing compound. The compound shall have a chlorinated rubber type in accordance with ASSTM C-309, Type 1, red pigment that can be readily seen by the inspector. The compound shall be applied in accordance with the manufacturer's recommendations from May 15 to October 15. The compound shall be Intermountain Hard-N-Seal or its equivalent.

12.17 REMOVAL OR REPAIR

When concrete is honeycombed, damaged, improperly cured or otherwise defective, the developer/contractor shall remove and replace the structure or structural member containing the defective area.

The developer/contractor shall erect and maintain suitable barriers to protect the finished surface. Any section damaged from traffic or other causes occurring prior to its official acceptance by the developer/contractor at his own expense in a manner satisfactory to the City.

When specifications are not met it may be cause for rejection.

12.18 CONCRETE IN COLD WEATHER

When the atmospheric temperature may be expected to drop below 40°F at the time concrete is delivered to the work site, during placement, or at any time during the curing period, the following provisions may also apply:

1. The temperature of the concrete at time of placing shall not be less than 50°F nor more than 90°F. The temperature of neither aggregates nor mixing water shall be more than 100° just prior to mixing with the cement.

2. When the daily minimum temperature is less than 40°F, concrete structures shall be insulated or housed and heated after placement. The temperature of the concrete and air adjacent to the concrete shall be maintained at not less than 50°F nor more than 90°F for the duration of the curing period.

3. Method of insulation shall be by standard concrete insulation blankets, or straw. When using straw the Contractor shall have a bottom and top layer of visqueen with six (6) inches of straw between visqueen layers. Methods of insulating, housing and heating the structure shall conform to "Recommended Practice for Cold Weather Concreting," ACI Standard 306.

4. When dry heat is used to protect concrete, means of maintaining an ambient humidity of at least 40 percent shall be provided unless the concrete has been coated with curing compound or is covered with an approved impervious material.

5. Equipment for protecting concrete from freezing shall be available at the job site prior to placing concrete. Particular care shall be exercised to protect edges and exposed corners from freezing. The housing covering or other protection used, shall remain in place and intact at least 24-hours after the heating is discontinued.

12.19 CONCRETE IN HOT WEATHER

When climatic or other conditions are such that the temperature of the concrete may reasonably be expected to exceed ninety degrees (90°) F at the time of delivery at the work site, during placement, or during the first twenty-four (24) hours after placement, the following provisions also shall apply:

1. The developer/contractor shall maintain the temperature of the concrete below ninety degrees (90°) F during mixing, conveying, and placing. Methods used shall conform to "Recommended Practice for Hot Weather Concreting," ACI Standard 605.

2. The concrete shall be placed immediately after mixing. Truck mixing shall be delayed until only enough time remains to finish mixing before the concrete is placed.

3. Exposed concrete surfaces which tend to dry or set too rapidly shall be continuously moistened by means of fog sprays or otherwise protected from drying during the time between placement and finishing, and after finishing.

4. Finishing of slabs and other exposed surfaces shall be started as soon as the condition of the concrete allows and shall be completed without delay.

5. Concrete surfaces exposed to the air shall be covered as soon as the concrete has hardened sufficiently and shall be kept continuously wet for at least the first 24 hours of the curing period, for the entire curing period unless curing compound is applied.

6. Formed surfaces shall be kept completely and continuously wet for the duration of curing period.

7. If moist curing compound is continued before the end of the curing period, pigmented curing compound shall be applied immediately, following the procedures specified in Section 12.2.6.

SECTION 13

ASPHALT PAVING

13.1 GENERAL DESCRIPTION

This section covers the requirements for bituminous surface paving on roads. All streets shall be surfaced in accordance with the following:

1. 6-inch minimum or more (based on pavement design) crushed gravel base course over prepared subgrade.

2. 3-inch minimum or more (based on pavement design) compacted thickness plant mix asphalt surfacing.

3. 1-inch minimum or more (based on pavement design) compacted thickness plant mix asphalt overlay, as required by the Public Works Department.

4. Pavements in Arterial or Collector Roads in non-sensitive lands areas shall be a minimum of 4-inch asphalt with 10-inch base course or equivalent pavement structural number as approved by the City Engineer. Sensitive Lands Areas shall include a minimum of 10-inches sub-base course. Arterial/Collector road pavements shall be designed for the 20-year ADT forecasts per the latest version of the City Transportation Master Plan with a minimum of 5% trucks or greater as determined by the City Engineer for the given roadway. Alternative pavement structure may be approved by the City Engineer based upon a review of detailed pavement design by a qualified, licensed geotechnical engineer.

5. Pavements in Sensitive Lands Ordinance areas shall be a minimum of 3-inch asphalt, 8-inches base course, and 12-inches subbase course for local roads; 4-inch asphalt, 9 inches base course, and 13-inches subbase course for collector roads; and 5-inches asphalt, 10-inches base course, and 16-inches subbase course for arterial roads. Pavements shall be designed for the 20-year ADT forecasts per the latest version of the City Transportation Master Plan or development traffic study where no master plan data is available with a minimum of 3% trucks or greater as determined by the City Engineer for a given roadway. Alternative pavement structure may be approved by the City Engineer based upon a review of detailed pavement design by a qualified, licensed geotechnical engineer.

6. Existing roadways not having pavement structural number equivalent to design requirements shall be reconstructed to centerline of roadway by development abutting the roadway frontage.

13.2 ROAD SUBGRADE PREPARATION

If the pavement design does not require any sub-base materials, the subgrade shall be scarified to a depth of 8 inches the full width of roadway section, and the loosened material shall be moistened and compacted to the equivalent of 95% of the maximum dry density as measured by AASHTO T-99.

If the pavement design or trench conditions require sub-base imported materials, the subgrade shall be over-excavated to the depth specified across the full width of roadway section and replaced with select granular material as defined in Section 3.9 and be moistened and compacted as above.

No organic material, soft clay, spongy material, frozen earth, or other deleterious material will be permitted in the scarified or imported subgrade layer. Rough subgrades shall be shaped and graded to within a tolerance of 0. 10 feet of design grade and drainage shall be maintained at all times.

During the rolling operation, moisture content of the subgrade layer shall be maintained at not less than 97% or more than 105% of optimum moisture content. Rolling shall be continued until the entire road bed is compacted to the specified density to a minimum depth of 8 inches.

13.3 BASE COURSE

Base for all streets shall consist of select material, either natural or crushed, placed on a prepared subgrade in conformance with the lines, grades and dimensions shown on the plans.

Unless otherwise approved by the City Engineer, the road base material shall be crushed rock or gravel and shall conform to one of the following gradations by weight:

Sieve Size	Ideal Gradation (Percent Passing)	Individual Sample Tolerances
¾”	100%	0
1/2"	85%	±6
#4	61%	±6
#16	33%	±5
#50	19%	±2
#200	9%	±2

All materials shall be secured from approved sources. It shall be uniform in quality and well graded from course to fine.

Before placing the road base, the supplier or contractor furnishing the material shall submit, if required by the City Engineer, sieve analysis of stock-piled material showing that it meets the above requirements.

The material shall be deposited and spread in uniform layer, without segregation of size with such depth that when compacted the layer will have the required thickness.

Each layer shall be compacted for the full width and depth by rolling with a pneumatic roller weighing at least 10 tons. Alternate grading and rolling will be required to provide a smooth, even and uniformly compacted course true to cross section and grade. Places inaccessible to rolling shall be compacted with mechanically operated hand tampers.

The gravel base shall be compacted to not less than 95% maximum dry density as determined by AASHTO T-180 Surfaces shall be true to the established grade with thickness being not less than 1/4 inch from the required layer thickness and with the surface elevation varying not more than 3/8 inch in ten-feet from the true profile and cross section.

13.4 BITUMINOUS SURFACE COURSE

Over the dry, dust free, compacted base course, the Contractor shall place and compact a bituminous asphalt cement surface course. The surface course shall consist of a mixture of mineral aggregate and binder. Gradation of aggregate shall conform to one of the following:

3/4-Inch Gradation

Sieve Size	Ideal Gradation (Percent Passing)	Individual Sample Tolerances
3/4"	100%	0
3/8"	80%	±10
#4	50%	±8
#8	37%	±7
#16	24%	±6
#50	15%	±6
#200	6%	±2

The Contractor shall establish a mix gradation and the amount of bituminous material shall be subject to the approval of the City Engineer and shall meet the requirements of the gradation selected. The asphalt content by weight shall be between 4.5 and 7 percent. Regardless of the bituminous content there shall not be more than 3% voids in the aggregate.

The bituminous material for surface course shall be, AC 10, or penetration asphalt cement conforming to the requirements of ASTM M20-60. The bituminous material shall be free of water and will contain no mineral matter other than that naturally contained in the asphalt.

The bituminous surface course shall be mixed at a mixing plant and spread and compacted on the prepared base in conformance with the lines and dimensions shown on the plans and in accordance with these specifications. All structure edges (curbs, etc.) shall receive a "tack" coat.

All traffic shall be kept off the completed surface for a minimum of 24 hours, unless otherwise authorized by the City Engineer or Public Works Director.

13.5 CONSTRUCTION METHODS AND EQUIPMENT

The methods employed in performing the work, all equipment, tools, and machinery and other appliances used in handling the materials and executing the work shall be the responsibility of the Contractor. The Contractor shall make such changes in the methods employed and in the equipment used as are necessary whenever the bituminous material being produced does not meet the specifications herein established.

13.6 SPREADING AND COMPACTION

The bituminous mixtures shall be spread with self-propelled mechanical spreading and conditioning equipment capable of distributing at least a 12-foot width. Unless otherwise designated or directed by the City Engineer, bituminous base course more than 3 inches in total compacted thickness shall be spread in two or more courses, with no courses

exceeding 3 inches in compacted thickness and no courses less than I inch in thickness. The mixture shall be spread and struck off in such a manner that the finished surface shall result in a uniform smooth surface. The longitudinal joints in succeeding courses shall be off-set at least 6-inches transversely to avoid a vertical joint through more than one course.

The temperature of the bituminous mix shall be between 270 degrees F. and 325 degrees when placing.

After the mixture has been spread, the surface shall be rolled with a power driven roller, weighing not less than 10 tons, in longitudinal direction commencing at the outside edge or lower side and proceeding to the higher side. Each pass of the roller shall overlap the preceding pass at least one-half the width of the roller. Rolling shall continue until 95% of the laboratory density as determined in accordance with ASTM Designation D-1559 (Marshall Test) for the bituminous mixture being used has been obtained. Density tests shall be done following the procedures of ASTM D2950.

Rolling operations shall be conducted in such a manner that shoving or distortion will not develop beneath the roller.

The surface of the pavement, after compaction, shall be uniform and true to the established crown and grade. When tested with a ten (10) foot straight edge placed parallel to the centerline of the pavement, the surface of the pavement at any point shall not deviate from the lower edge of the straight edge by more than one eighth of an inch. All high and low spots shall be remedied immediately by removing the wearing course material over the affected areas and replacing it with fresh, hot wearing course and surface finish material and immediately compacting it to conform with the surrounding area.

The Contractor shall be responsible to keep all traffic off the completed surface for a minimum period of 24 hours.

No bituminous surface course shall be placed when the temperature of the air (measured in the shade) or roadbed is 50° F or below, during rainy weather, when the base is wet or frozen, or during any other unfavorable weather conditions as determined by the City Engineer or Public Works Director.

13.7 BITUMINOUS PLANT MIX SEAL COAT

The Contractor shall place and compact a bituminous plant mix seal coat over the bituminous surface course as required by the City. The seal coat shall consist of a mixture of mineral aggregate and bituminous binder. Gradation of the aggregate shall conform to the following:

Bituminous Plant Mix Gradation of Aggregate

Sieve Size	Ideal Gradation (percent passing)	Individual Sample Tolerances
½-inch	100	0
3/8-inch	97	±4
No. 4	40	±4
No. 8	17	±3
No. 200	3	±1

The Contractor shall establish a mix gradation, and the amount of bituminous material shall be subject to the approval of the City Engineer and shall meet the requirements of the Gradation selected. Regardless of the bituminous content, there shall not be more than 3% voids in the mix.

The bituminous material shall be AC-10 asphalt cement conforming to the requirements of AASHTO M-226.

A tack coat shall be applied to all existing pavement prior to pouring the plant mix seal coat. The bituminous material shall be Grade SS-IH Emulsion applied at the rate of 0.05 gallons per square yard.

The bituminous plant mix seal coat shall be mixed at a mixing plant and spread and compacted on the prepared pavement in accordance with the lines and dimensions shown on the plans and in accordance with these specifications. The seal coat shall be spread with self-propelled mechanical spreading and conditioning equipment capable of distributing at least a 12 foot width. Locate longitudinal joints within 6 inches of lane lines.

After the mixture has been spread, the surface shall be rolled with a power driven roller, weighing not less than 10 tons, in longitudinal direction commencing at the outside edge or lower side and proceeding to the higher side. Each pass of the roller shall overlap the preceding pass at least one-half the width of the roller. Rolling shall continue until 95% of the laboratory density as determined in accordance with ASTM Designation D-1559 (Marshall Test) for the bituminous mixture being used has been obtained.

13.8 WEATHER LIMITATIONS

No bituminous surface shall be placed when the temperature of the air or road bed is below 50 degrees F., during rainy weather when the base is wet, or during other unfavorable weather conditions as determined by the City Engineer.

No bituminous plant mix seal coat shall be placed when the temperature of the air or roadbed is less than 70 degrees F. during rainy weather when the pavement surface is

wet, or during unfavorable weather conditions as determined by the City Engineer. The air temperature shall be measured in the shade.

13.9 FLAGGING

Flagmen shall be required to facilitate the safe control of traffic over highways and streets under construction. Flagging shall be performed by adequately trained and equipped flagmen. All flagging shall be done as described in the Safety Orders covering flagmen of the Industrial Commission of Utah.

SECTION 14

FENCING SPECIFICATIONS

14.1 GENERAL DESCRIPTION

This section shall cover the requirements permanent fencing along boundaries, property lines or open ditches as may be required by American Fork City.

14.2 CHAIN LINK FENCE SPECIFICATION

14.2.1 MATERIALS

A. Fabric to be chain link which has been galvanized after weaving with a minimum of 1.2 oz. per square foot of wire surface. Fabric shall be 2-inch mesh and constructed of 9 gauge wire.

B. Tension wire for bottom only, No. 7 gauge spring coil.

C. Top Rail: 1-5/8-inch tubular rail with a 0.065 wall thickness or approved equal.

D. Corner, Gate, or End Posts: Minimum diameter 2-9/8-inch O.D. galvanized pipe at 3.65 lbs. per foot per ASTM A-120.

E. Line Posts: Minimum diameter of 1-7/8-inch O.D. galvanized pipe at 2.72 lbs. per foot per ASTM A-120.

F. Braces: For all corner and gate posts – 1-5/8-inch O.D. galvanized pipe and adjustable 3/8-inch truss rods.

14.2.2 CONCRETE

Shall conform to the provisions of Section 12 Class C. Line, corner and gate posts shall be set in 36-inch deep holes and backfilled with concrete. A minimum of 6-inches of concrete shall be provided between the bottom of the hole and the bottom of the post being set. All line posts shall be set in 9-inch minimum diameter holes and all corner and gate posts shall be set in 12-inch minimum diameter holes.

14.2.3 CONSTRUCTION METHODS

The steel posts shall be set true to line and grade in Concrete bases. The distances between posts in any section shall be uniform, but shall not exceed the following spacing:

Tangent sections and curves down to 500-foot radius: not more than 10-feet.

Curves 500-foot radius to 200-foot radius: not more than 8-feet.

Curves 200-foot radius to 100-foot radius; not more than 6 feet.

Curves 100-foot radius: not more than 5 feet.

Pull posts shall be provided at 500-foot maximum intervals. Changes in line of 30 degrees or more shall be considered as corners.

Fence fabric shall be placed on the roadway side of posts unless otherwise specified. The fabric shall be placed approximately 1-inch above the ground, and on a straight grade between posts by excavating high points of the ground. Filling depressions will be permitted only upon approval of the City Engineer.

The fabric shall be stretched taut and securely fastened to the posts. Fastening to end, gate, corner, and pull posts shall be with stretcher bars and metal bands spaced at 1-foot intervals. The fabric shall be cut and each span fastened independently at all pull and corner posts. Fastening to line posts shall be with tie wire, metal bonds, or other approved methods at 14-inch intervals. The top edge of fabric shall be attached to the top rail at approximately 24-inch intervals. The bottom tension wire shall be attached to the fabric with tie wires at 24-inch intervals and shall be secured to the end or pull posts with brace bands. Privacy fencing shall be permitted upon the approval of the City Engineer.

14.3 WOOD FENCE SPECIFICATIONS

14.3.1 MATERIALS

A. Slats: Redwood, cedar, combed spruce, or other wood covering acceptable to the City.

B. Bottom and Top Rail: Minimum 2-inch x 4-inch x 8-foot cedar stud.

C. Corner, Gate, End, or Line Posts: Minimum size 4-inch x 4-inch cedar wood post

14.3.2 CONCRETE

All corner, gate, end, or line wood posts shall be set in concrete, All Concrete used for post bases shall conform to the provisions of Section 12 Class C.

14.3.3 CONSTRUCTION METHODS

The cedar posts shall be set true to line and grade in concrete bases at least 2-feet in depth. All posts shall be sound and free from all decay, splits, multiple cracks, or any other defect which would weaken the posts or otherwise cause them to be structurally unsuitable for the purpose intended.

The maximum distance between posts in any section shall not exceed 8-feet. The top and bottom railings shall be securely fastened to the posts with galvanized nails or other acceptable means. Changes in line of 30 degrees or more shall be considered as corners. A minimum of 6-inches of concrete shall be provided below the bottom of each post. End posts, corner posts, and gate posts shall have a concrete base at least 12-inches in diameter. Bases for line posts shall also be 12-inches in diameter.

Fence slats shall be placed on the roadway side of posts unless otherwise specified. The slats shall be placed approximately 1 -inch above the ground, and on a straight grade between posts by excavating high points of the ground. Filling depressions will be permitted only upon approval of the City Engineer. The slats shall be sound and free from all major decay or defects which would weaken or otherwise cause them to be unsuitable for fence slats. Fastening to top and bottom railings shall be done with two galvanized nails at both the top and bottom rail.

Refer to Standard Drawing No. 15.29.

SECTION 15

DETAILED DRAWINGS

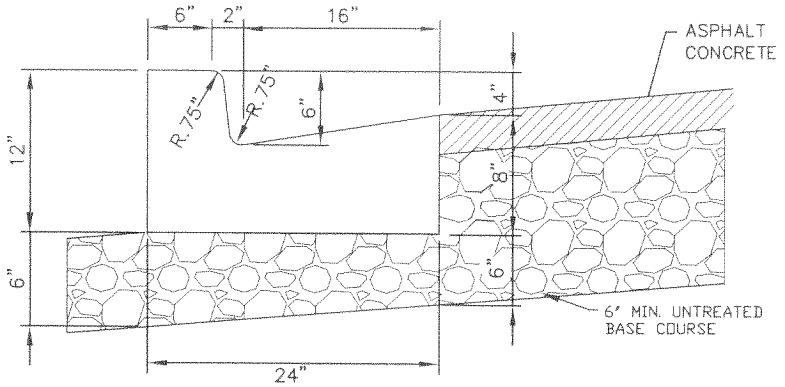

TYPE E CURB & GUTTER
-NTS-

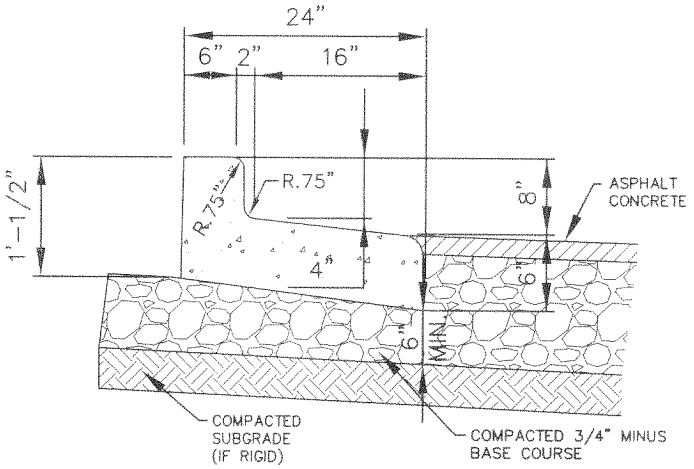

REVERSE LIP CURB & GUTTER "PRIVATE USE ONLY"
-NTS-

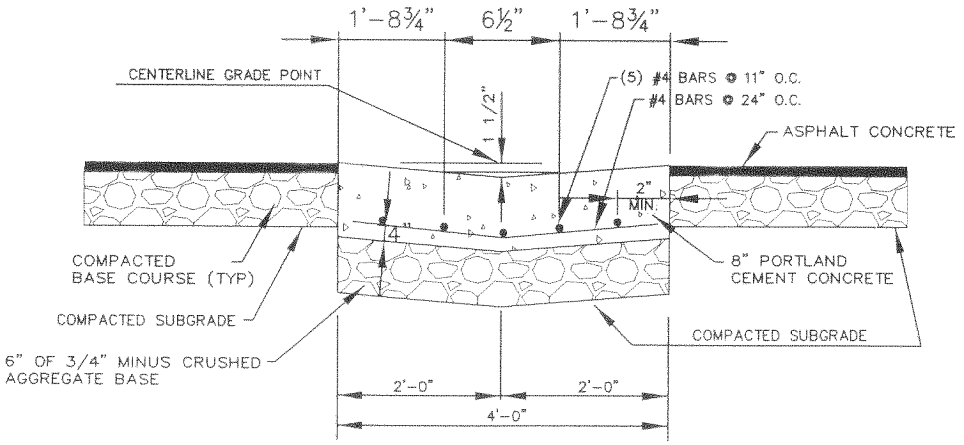

4.0' VALLEY GUTTER
-NTS-

DRAWN: JRP	Northern ENGINEERING-LAND PLANNING -CONSTRUCTION MANAGEMENT 1040 E. 800 N. OREM, UTAH 84057 (801) 802-8992	AMERICAN FORK CITY	STANDARD DETAIL FOR TYPE B1 C&G REVERSE LIP C&G VALLEY GUTTER	DRAWING NO. 15.1
REVISED:				
DATE: MAY 2002				
SCALE: VARIES				

K:\AMERICAN FORK STANDARDS\Drawings\FINAL\C&G - VALLEY GUTTER.dwg 05/12/2005 10:48:56 AM MDT

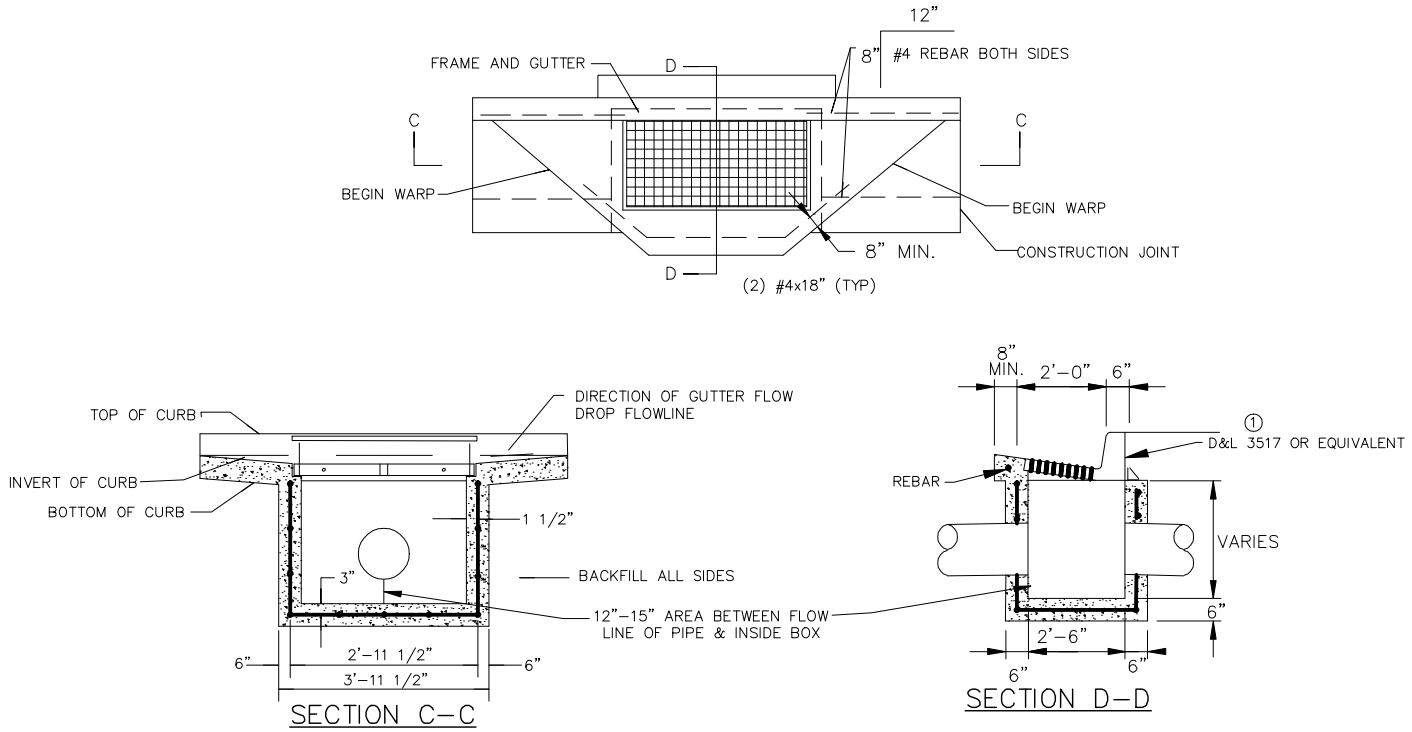

STORM DRAIN CATCH BASIN

-NTS-

NOTE:
A POLUTION PREVENTION DECAL REQUIRED ON ALL STORM DRAIN CATCH BASINS AND PRE-TREATMENT CURB INLETS.

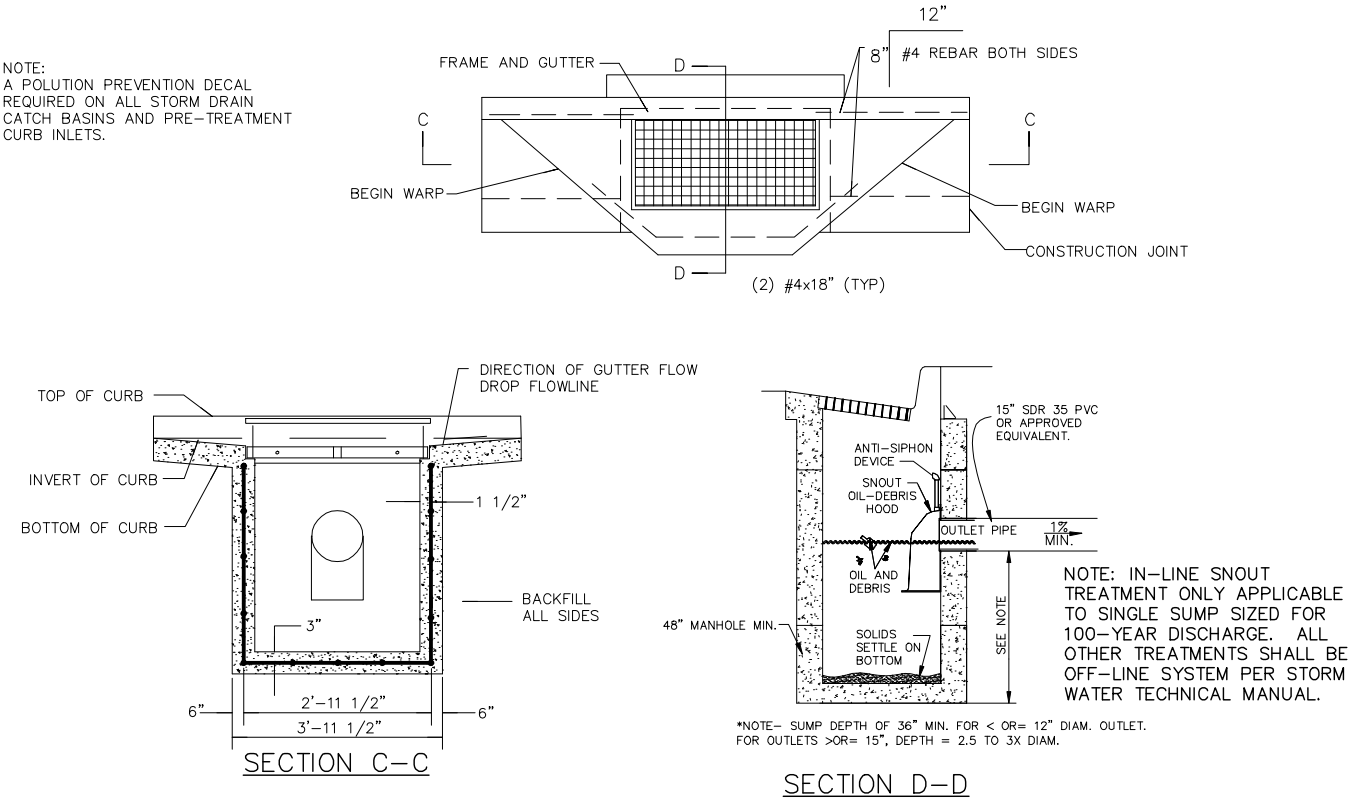

NOTE: IN-LINE SNOUT TREATMENT ONLY APPLICABLE TO SINGLE SUMP SIZED FOR 100-YEAR DISCHARGE. ALL OTHER TREATMENTS SHALL BE OFF-LINE SYSTEM PER STORM WATER TECHNICAL MANUAL.

PRE-TREATMENT CURB INLET WITH SINGLE GRATE

-NTS-

DRAWN: JRP	AMERICAN FORK 1853	AMERICAN FORK CITY	STANDARD DETAIL FOR: CATCH BASIN	DRAWING NO. 15.2
REVISED: AJS				
DATE: APRIL 2012				
SCALE: VARIES				

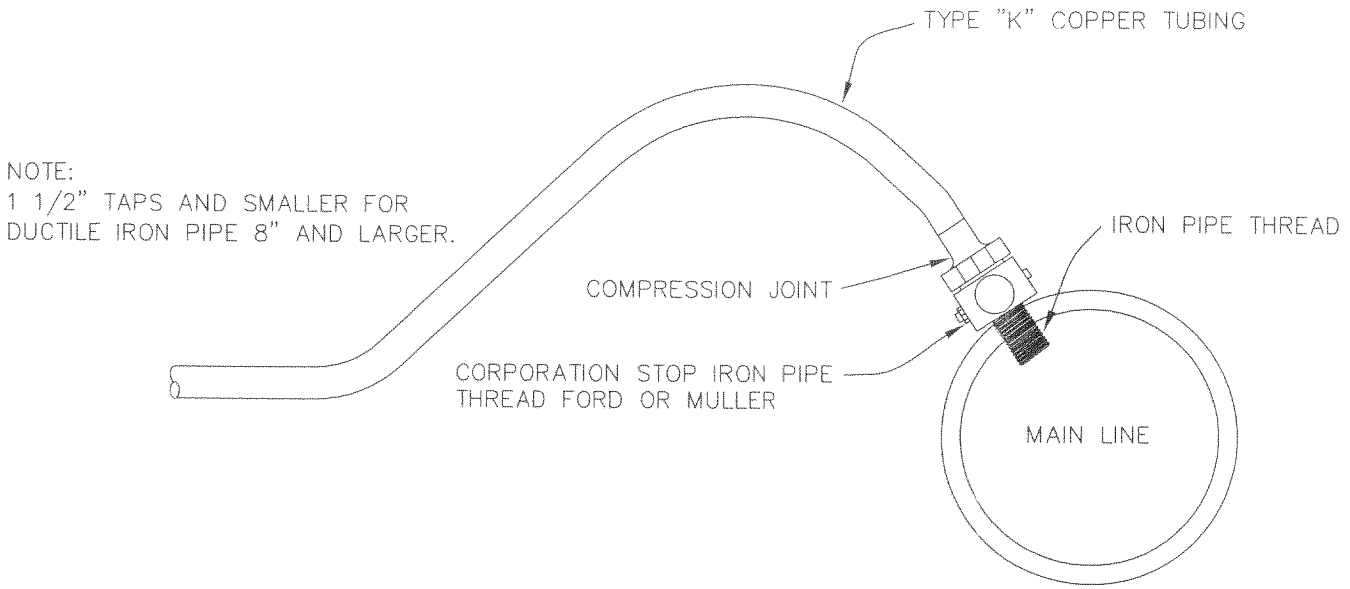

OPTION #2

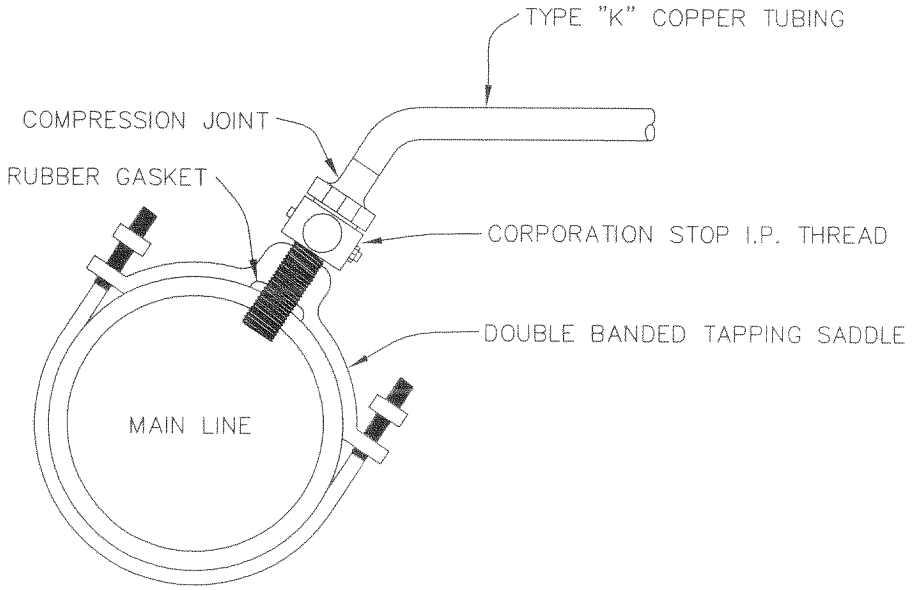

OPTION #1

DRAWN: JRP	Northern ENGINEERING-LAND PLANNING -CONSTRUCTION MANAGEMENT 1040 E. 800 N. OREM, UTAH 84057 (801) 802-8992	AMERICAN FORK CITY	STANDARD DETAIL FOR TYPICAL WATERMAN TAPS	DRAWING NO. 15.3
REVISED:				
DATE: JULY 2002				
SCALE: VARIES				

K:\AMERICAN FORK STANDARDS\Drawings\FINAL\WATERMAIN TAP.dwg 05/12/2005 11:55:51 AM MDT

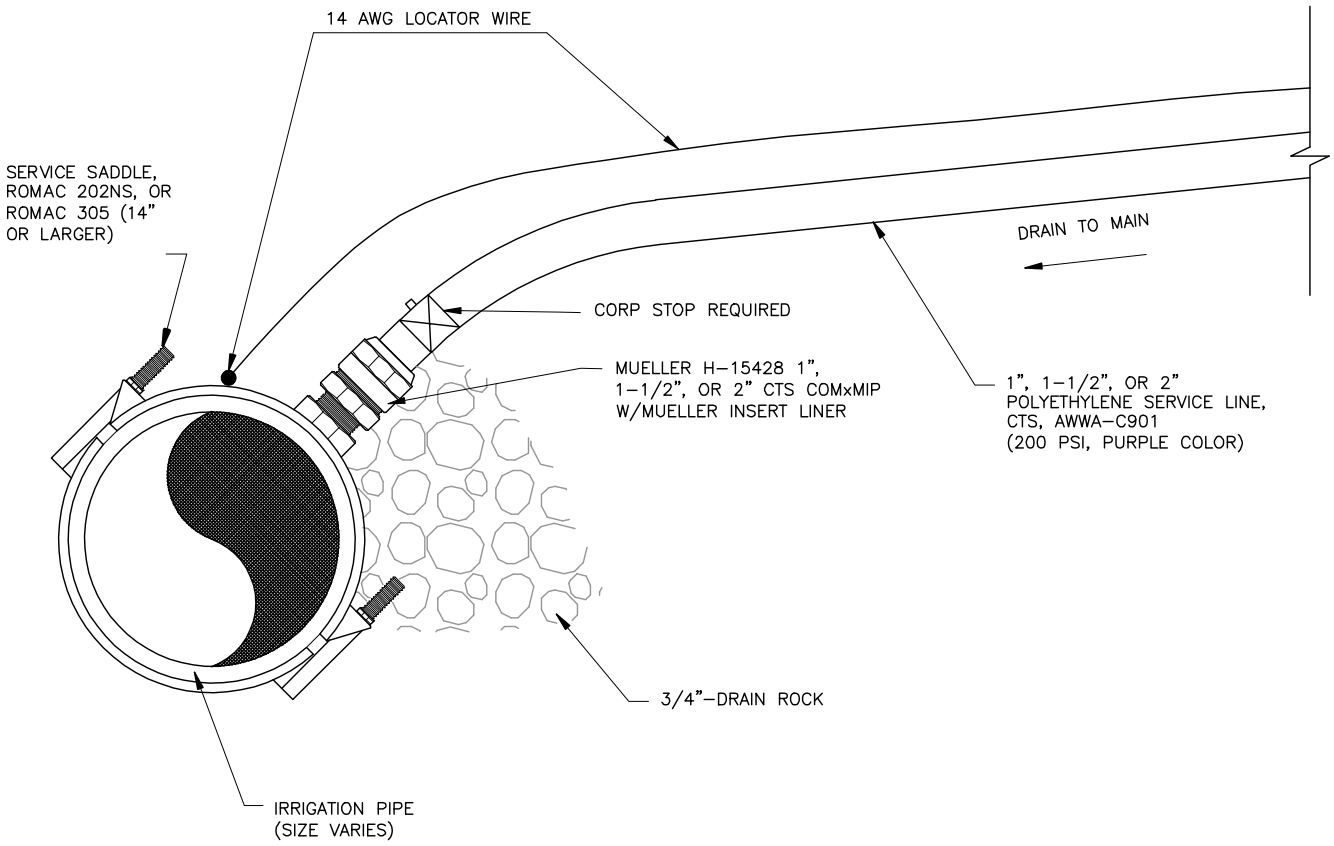

MUELLER 110 COMPRESSION INSERT LINER	
PART SIZE	PART NO.
1" CTS	504385
1 1/2" CTS	506139
2" CTS	506141

DRAWN:	HORROCKS ENGINEERS ONE WEST MAIN P.O. BOX 377 AMERICAN FORK (801) 763-5100	AMERICAN FORK CITY	STANDARD DETAIL FOR TYPICAL SECONDARY WATER MAIN TAP	DRAWING NO. 15.3A
REVISED: 11/2010				
DATE:				
SCALE:				

O:\Client\118 American Fork General\Irrigation Standards\2010 Update\ AF STD 15.03A.dwg 11/18/10 11:03 skyterss

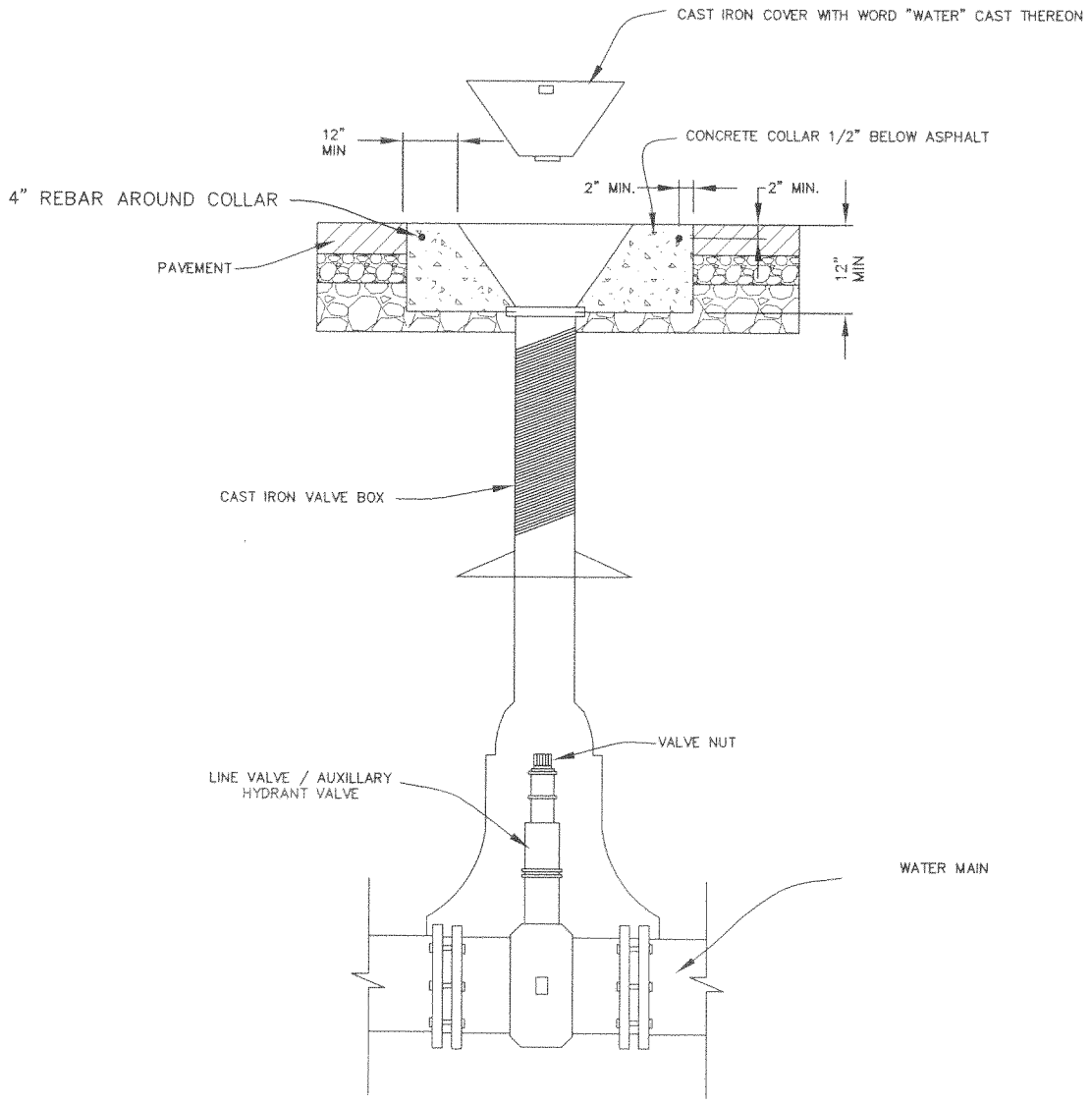

VALVE BOX DETAIL

DRAWN: JRP	Northern ENGINEERING-LAND PLANNING CONSTRUCTION MANAGEMENT 1040 E. 800 N. OREM, UTAH 84057 (801) 802-8992	AMERICAN FORK CITY	STANDARD DETAIL FOR VALVE BOX DETAIL	DRAWING NO. 15.4
REVISED:				
DATE: JULY 2002				
SCALE: VARIES				

K:\AMERICAN FORK STANDARDS\Drawings\FINAL\VALVE BOX.dwg 05/12/2005 11:54:18 AM MDT

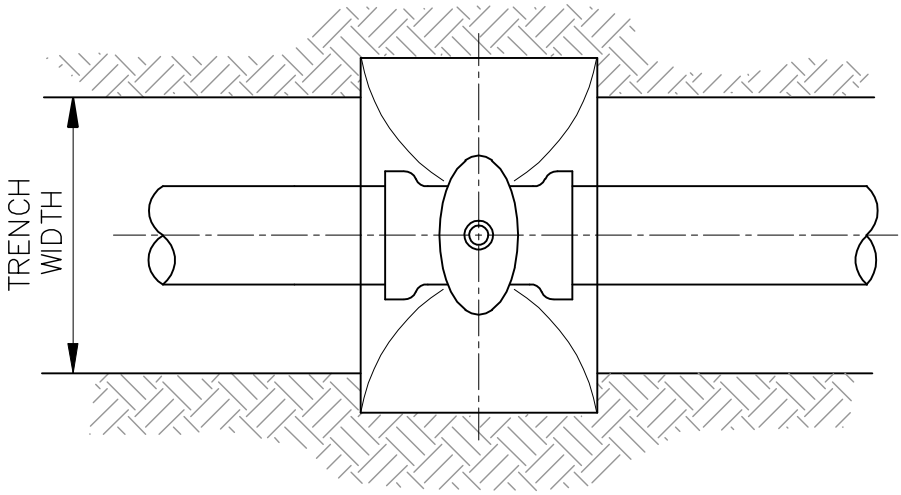

PLAN

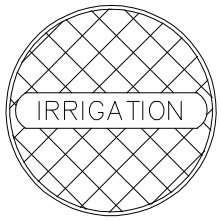

LID TYPE

CIRCULAR SHAPED LID

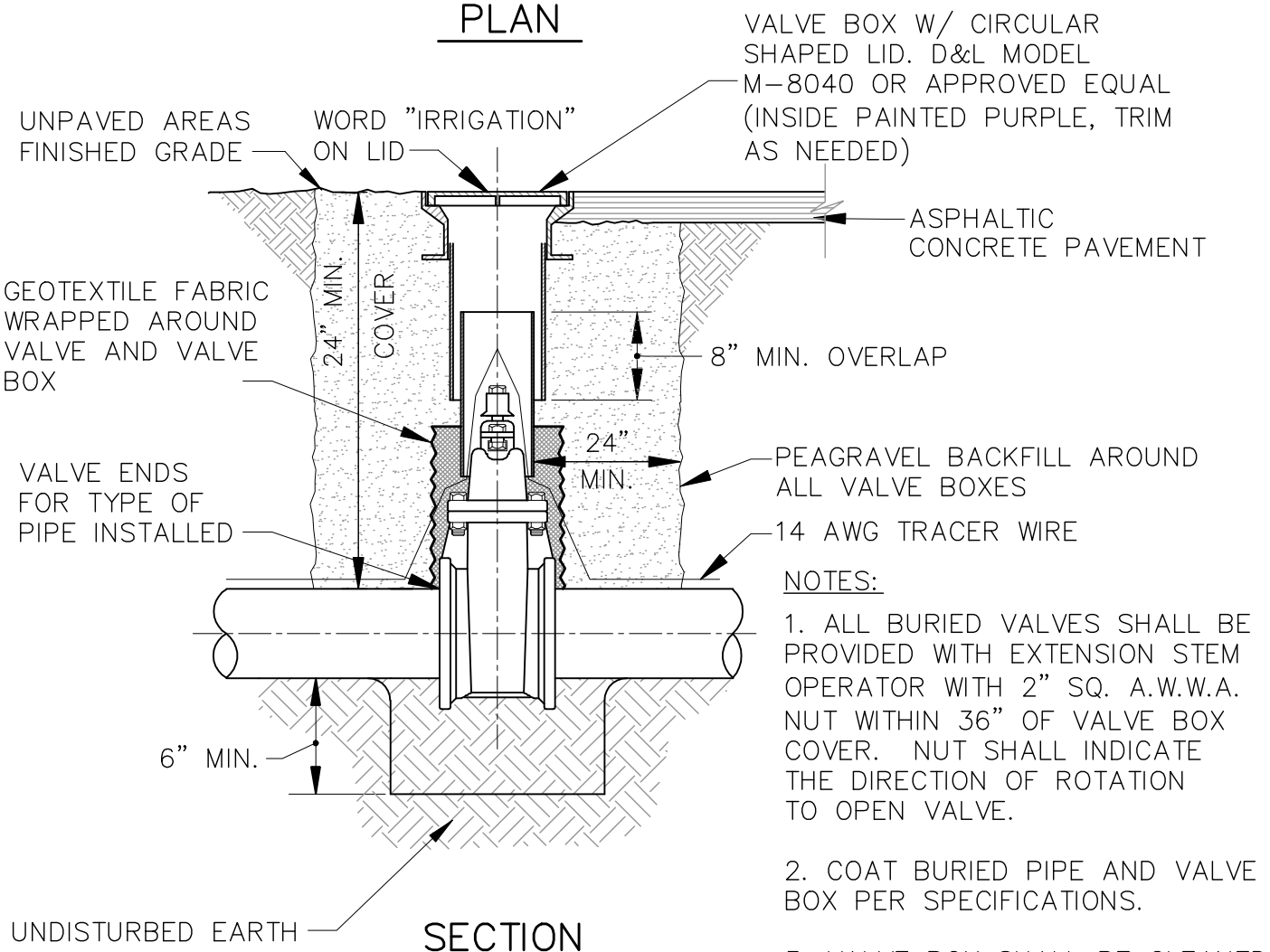

SECTION

NOTES:

1. ALL BURIED VALVES SHALL BE PROVIDED WITH EXTENSION STEM OPERATOR WITH 2" SQ. A.W.W.A. NUT WITHIN 36" OF VALVE BOX COVER. NUT SHALL INDICATE THE DIRECTION OF ROTATION TO OPEN VALVE.

2. COAT BURIED PIPE AND VALVE BOX PER SPECIFICATIONS.

3. VALVE BOX SHALL BE CLEANED OF ALL DEBRIS AND SOIL.

VALVE BOX INSTALLATION

DRAWN:	HORROCKS ENGINEERS — ONE WEST MAIN, P.O. BOX 377, AMERICAN FORK, (801) 763-5100	*AMERICAN FORK CITY*	STANDARD DETAIL FOR: SECONDARY WATER VALVE BOX DETAIL	DRAWING NO. 15.4A
REVISED: 11/2010				
DATE:				
SCALE: NONE				

O:\Client\118 American Fork General\Irrigation Standards\2010 Update\ AF STD 15.04A.dwg 11/18/10 11:04 skyless

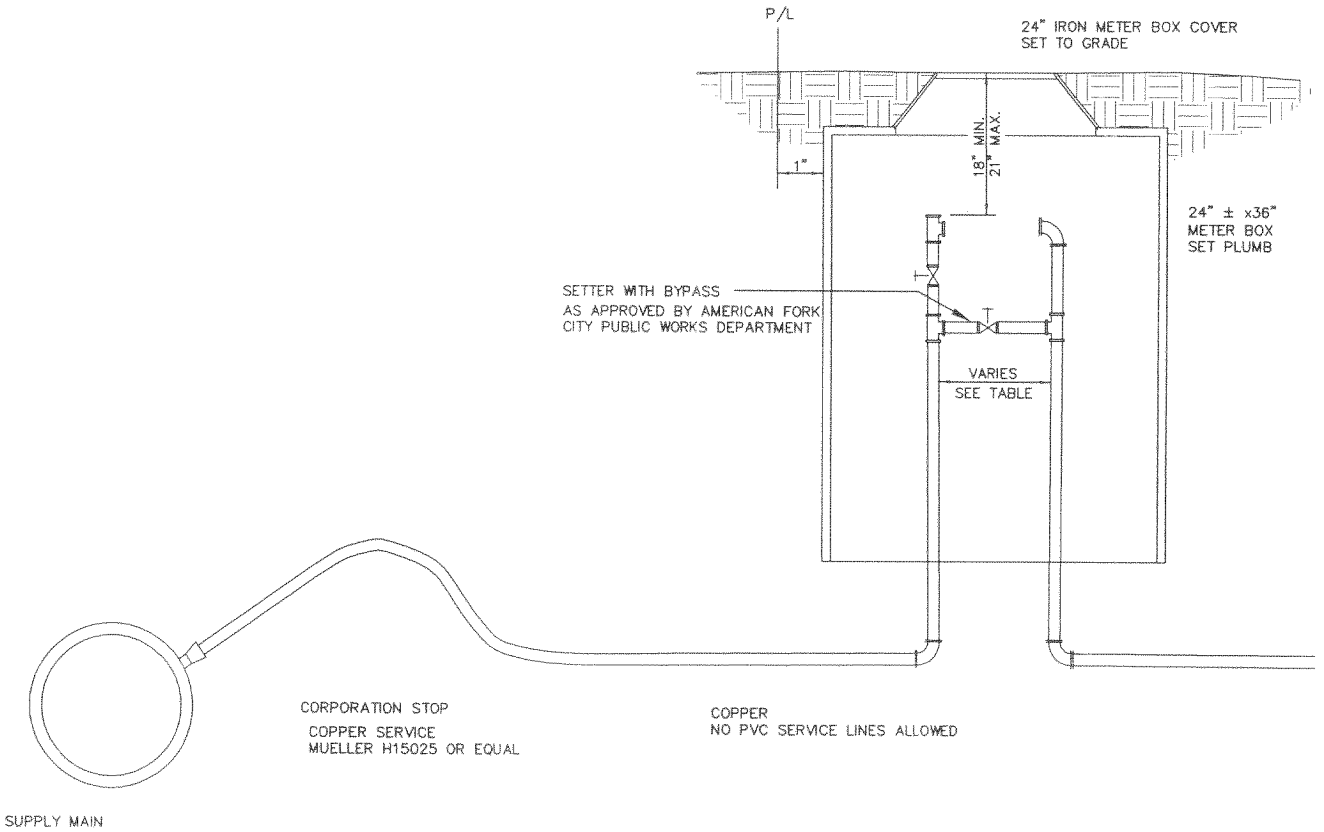

SPACING TABLE	
SIZE	SPACING
3/4"	7 1/2"
1"	10 3/4"
1 1/2"	13"
2"	17"

DRAWN: JRP	Northern ENGINEERING-LAND PLANNING -CONSTRUCTION MANAGEMENT 1040 E. 800 N. OREM, UTAH 84057 (801) 802-8992	AMERICAN FORK CITY	STANDARD DETAIL FOR CULINARY WATER SERVICE CONNECTION	DRAWING NO. 15.5
REVISED:				
DATE: MAY 2002				
SCALE: VARIES				

K:\AMERICAN FORK STANDARDS\Drawings\FINAL\CUL WATER CONNECTION.dwg 05/12/2005 10:50:19 AM MDT

SINGLE SERVICE

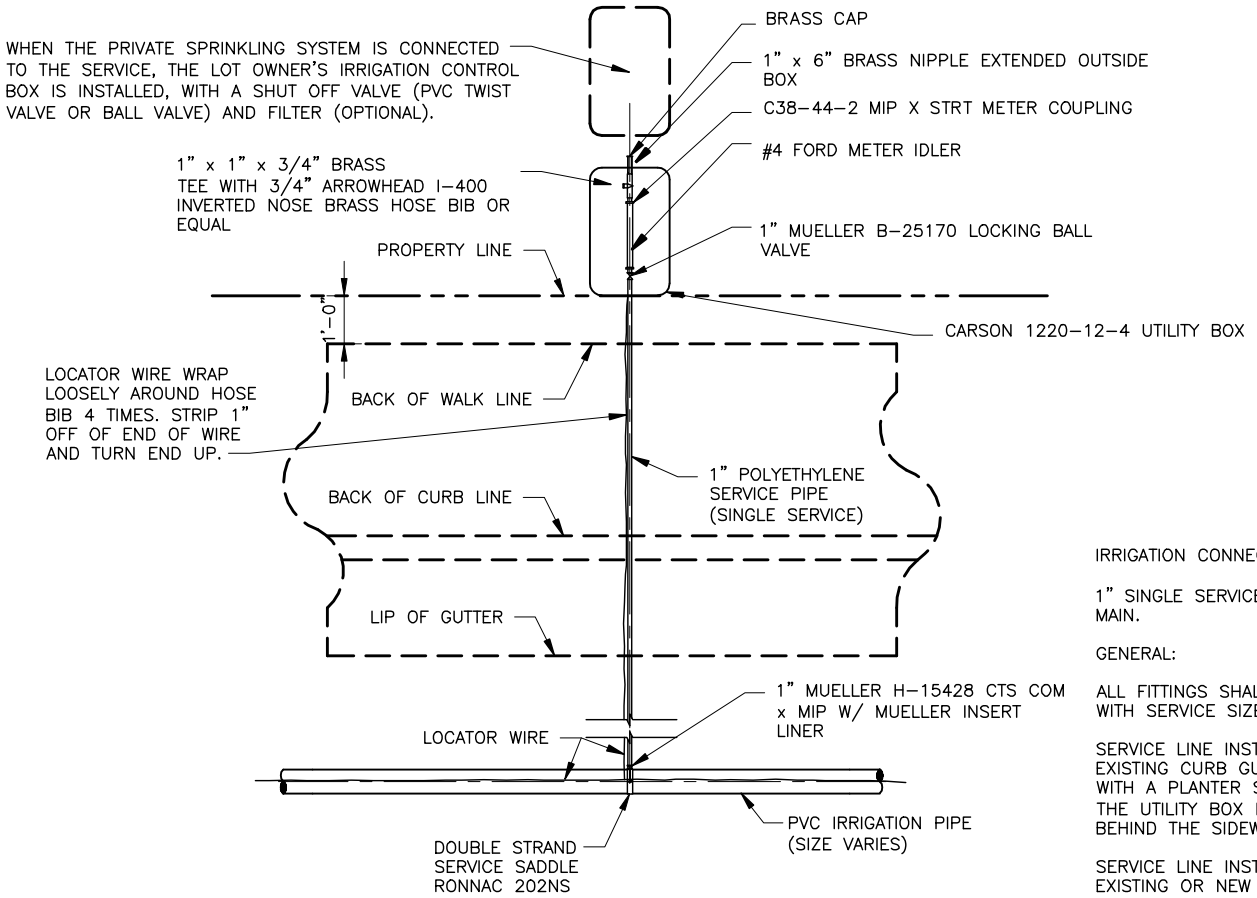

IRRIGATION CONNECTION NOTES:

1" SINGLE SERVICE CONNECTION TO MAIN.

GENERAL:

ALL FITTINGS SHALL BE COMPATIBLE WITH SERVICE SIZE.

SERVICE LINE INSTALLATION AT AN EXISTING CURB GUTTER & SIDEWALK WITH A PLANTER STRIP SHALL HAVE THE UTILITY BOX LOCATED 1'-0" BEHIND THE SIDEWALK.

SERVICE LINE INSTALLATION AT EXISTING OR NEW MONOLITHIC CURB, GUTTER & SIDEWALK SHALL HAVE THE UTILITY BOX LOCATED 1'-0" BEHIND THE SIDEWALK.

SERVICE LINE INSTALLATION AT A LOCATION WITH NO CURB, GUTTER & SIDEWALK SHALL HAVE THE UTILITY BOX LOCATED 1'-0" BEHIND THE FUTURE SIDEWALK.

DOUBLE SERVICE

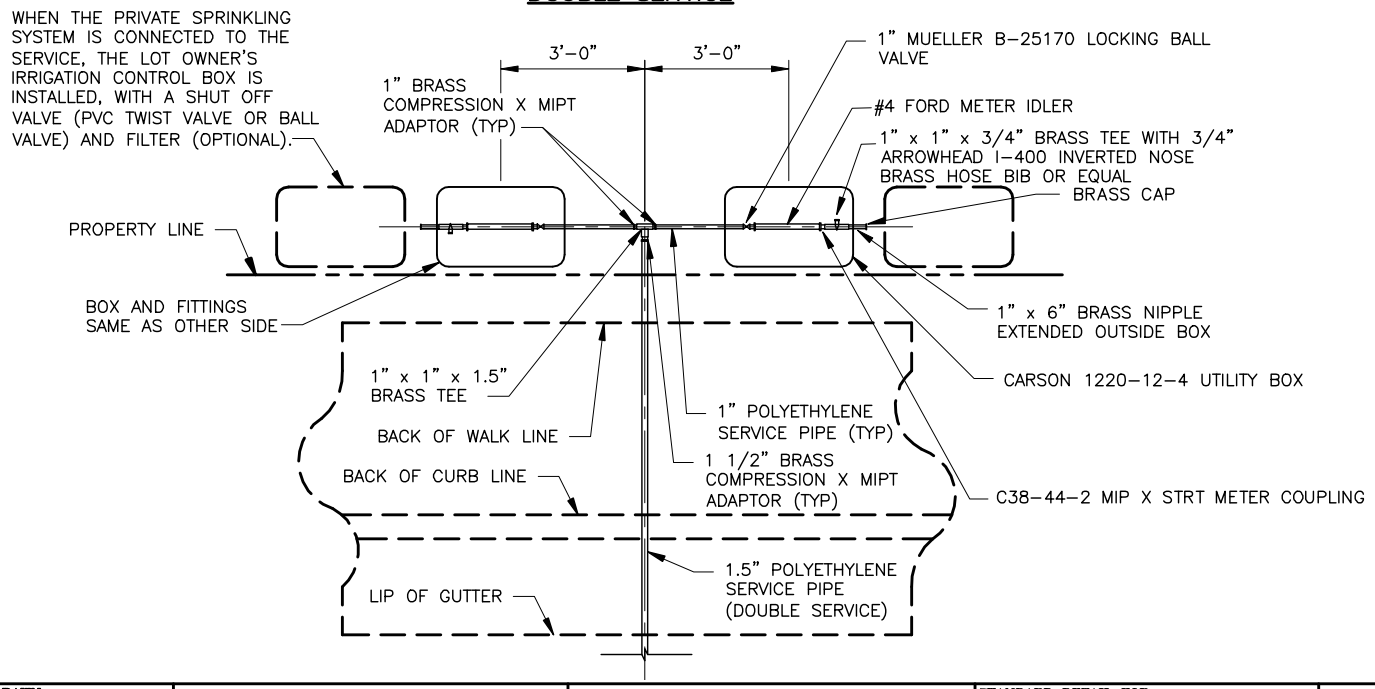

DRAWN:			STANDARD DETAIL FOR	DRAWING NO.
REVISED: 11/2010	HORROCKS ENGINEERS — ONE WEST MAIN, P.O. BOX 377, AMERICAN FORK, (801) 763-5100	AMERICAN FORK CITY	SINGLE/DOUBLE SERVICE CONNECTION FOR SECONDARY WATER	15.5A
DATE:				
SCALE:				

O:\Client\118 American Fork General\Irrigation Standards\2010 Update\ AF STD 15.05A.dwg 11/18/10 11:05 skyterss

SINGLE 1 1/2" SERVICE

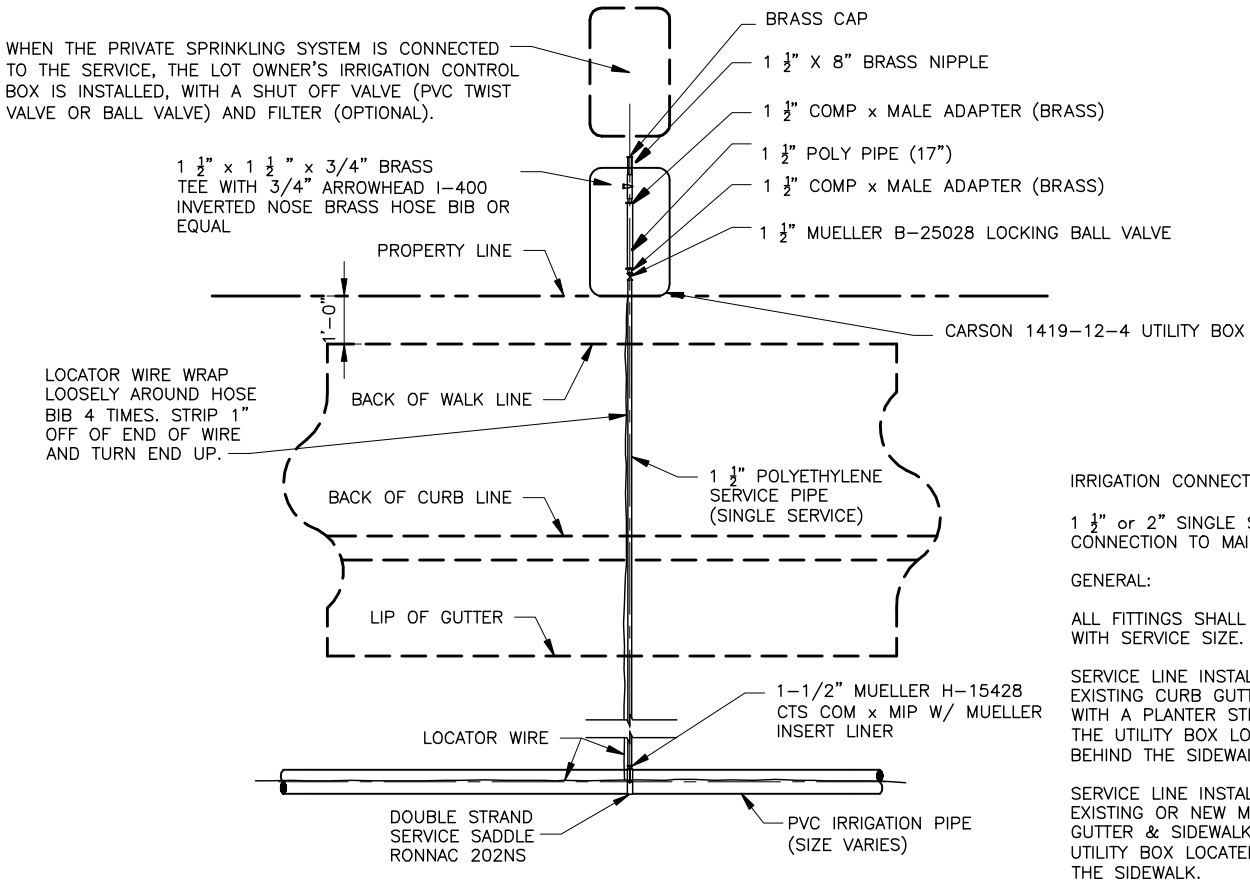

IRRIGATION CONNECTION NOTES:

1 1/2" or 2" SINGLE SERVICE CONNECTION TO MAIN.

GENERAL:

ALL FITTINGS SHALL BE COMPATIBLE WITH SERVICE SIZE.

SERVICE LINE INSTALLATION AT AN EXISTING CURB GUTTER & SIDEWALK WITH A PLANTER STRIP SHALL HAVE THE UTILITY BOX LOCATED 1'-0" BEHIND THE SIDEWALK.

SERVICE LINE INSTALLATION AT EXISTING OR NEW MONOLITHIC CURB, GUTTER & SIDEWALK SHALL HAVE THE UTILITY BOX LOCATED 1'-0" BEHIND THE SIDEWALK.

SERVICE LINE INSTALLATION AT A LOCATION WITH NO CURB, GUTTER & SIDEWALK SHALL HAVE THE UTILITY BOX LOCATED 1'-0" BEHIND THE FUTURE SIDEWALK.

SINGLE 2" SERVICE

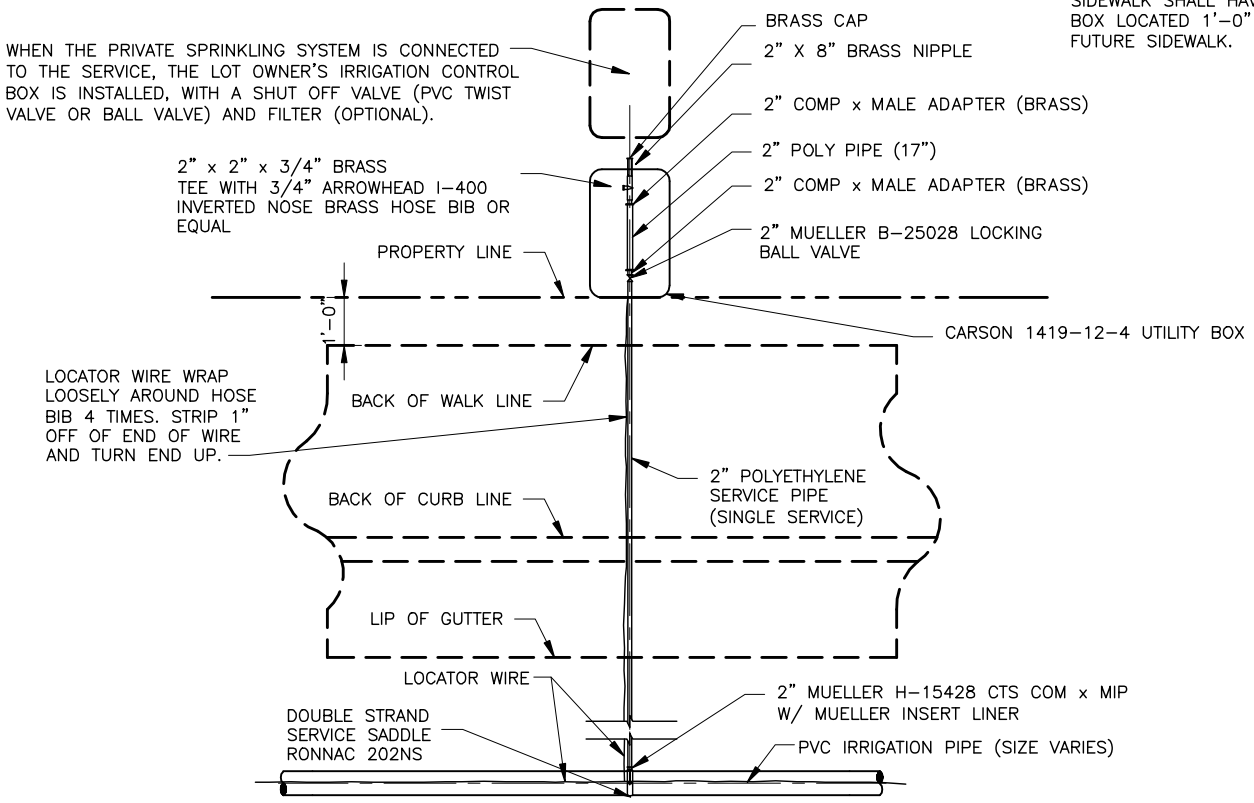

DRAWN:	HORROCKS ENGINEERS — ONE WEST MAIN, P.O. BOX 377, AMERICAN FORK, (801) 763-5100	AMERICAN FORK CITY	STANDARD DETAIL FOR: LARGE SERVICE CONNECTION FOR SECONDARY WATER	DRAWING NO. 15.5B
REVISED: 11/2010				
DATE:				
SCALE:				

O:\Client\118 American Fork General\Irrigation Standards\2010 Update\ AF STD 15.05B.dwg 11/18/10 11:07 skyless

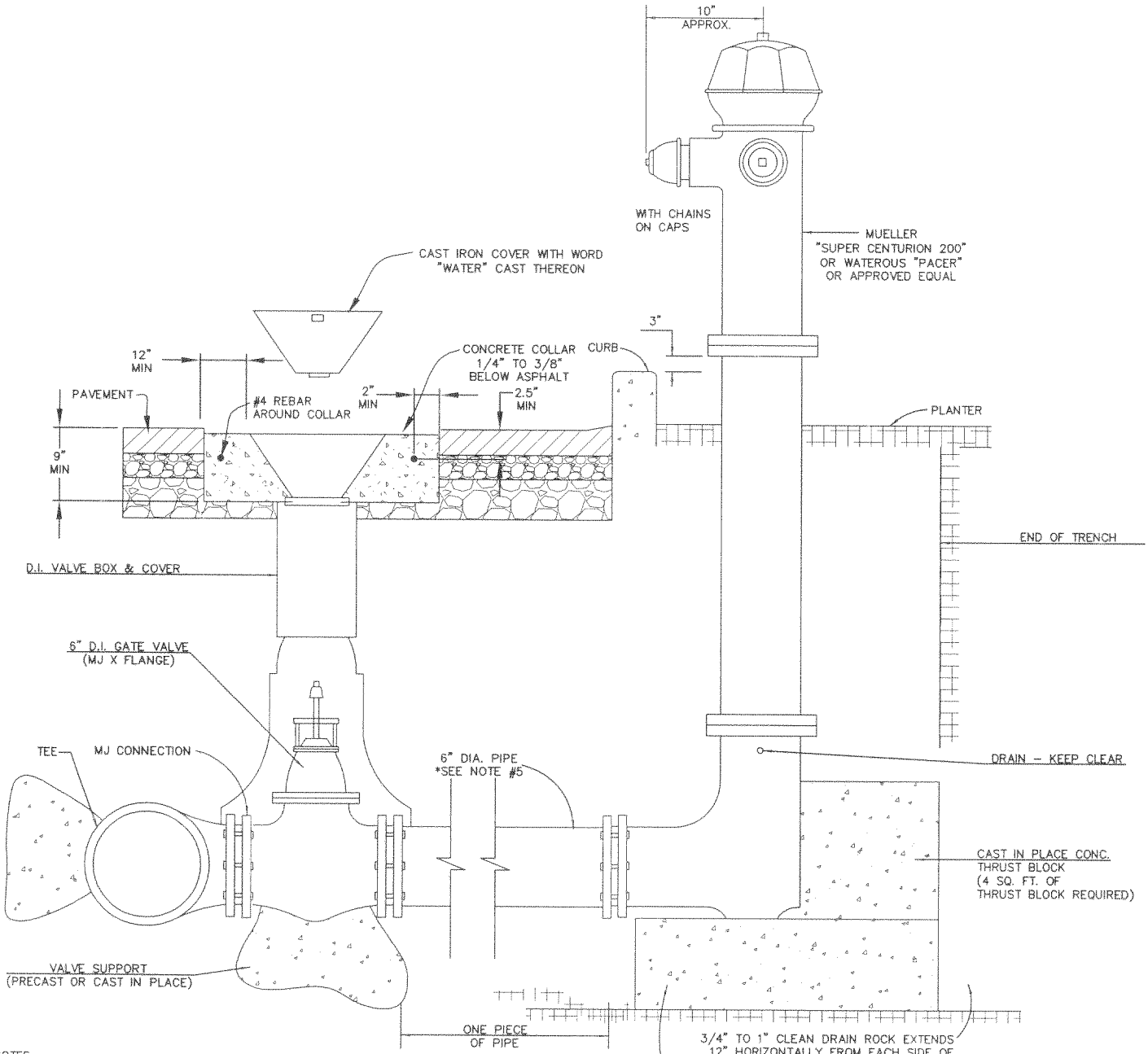

NOTES:

1. HYDRANTS THAT ARE TO BE RELOCATED AS CALLED FOR ON THE PLAN VIEW SHALL BE REINSTALLED IN ACCORDANCE WITH THIS DETAIL.
2. ALL GATE VALVES SHALL BE LOCATED AT THE HYDRANT AS SHOWN ON THIS DETAIL.
3. WHERE EXISTING FITTINGS ARE NOT COMPATIBLE WITH NEW MAIN CONSTRUCTION, SUITABLE ADAPTORS OR NEW FITTINGS SHALL BE USED UPON APPROVAL BY THE AMERICAN FORK CITY ENGINEER.
4. ALL ANCHORS AND BLOCKING TO BEAR AGAINST UNDISTURBED SOIL.
5. IF LENGTH EXCEEDS 1 LENGTH OF PIPE, INCREASE DIAMETER TO 8 INCH MINIMUM.

FIRE HYDRANT DETAIL

-NTS-

DRAWN: JRP	Northern ENGINEERING-LAND PLANNING -CONSTRUCTION MANAGEMENT 1040 E. 800 N. OREM, UTAH 84057 (801) 802-8992	AMERICAN FORK CITY	STANDARD DETAIL FOR FIRE HYDRANT	DRAWING NO. 15.6
REVISED:				
DATE: MAY 2002				
SCALE: VARIES				

K:\AMERICAN FORK STANDARDS\Drawings\FINAL\FIRE HYDRANT.dwg 05/12/2005 10:56:17 AM MDT

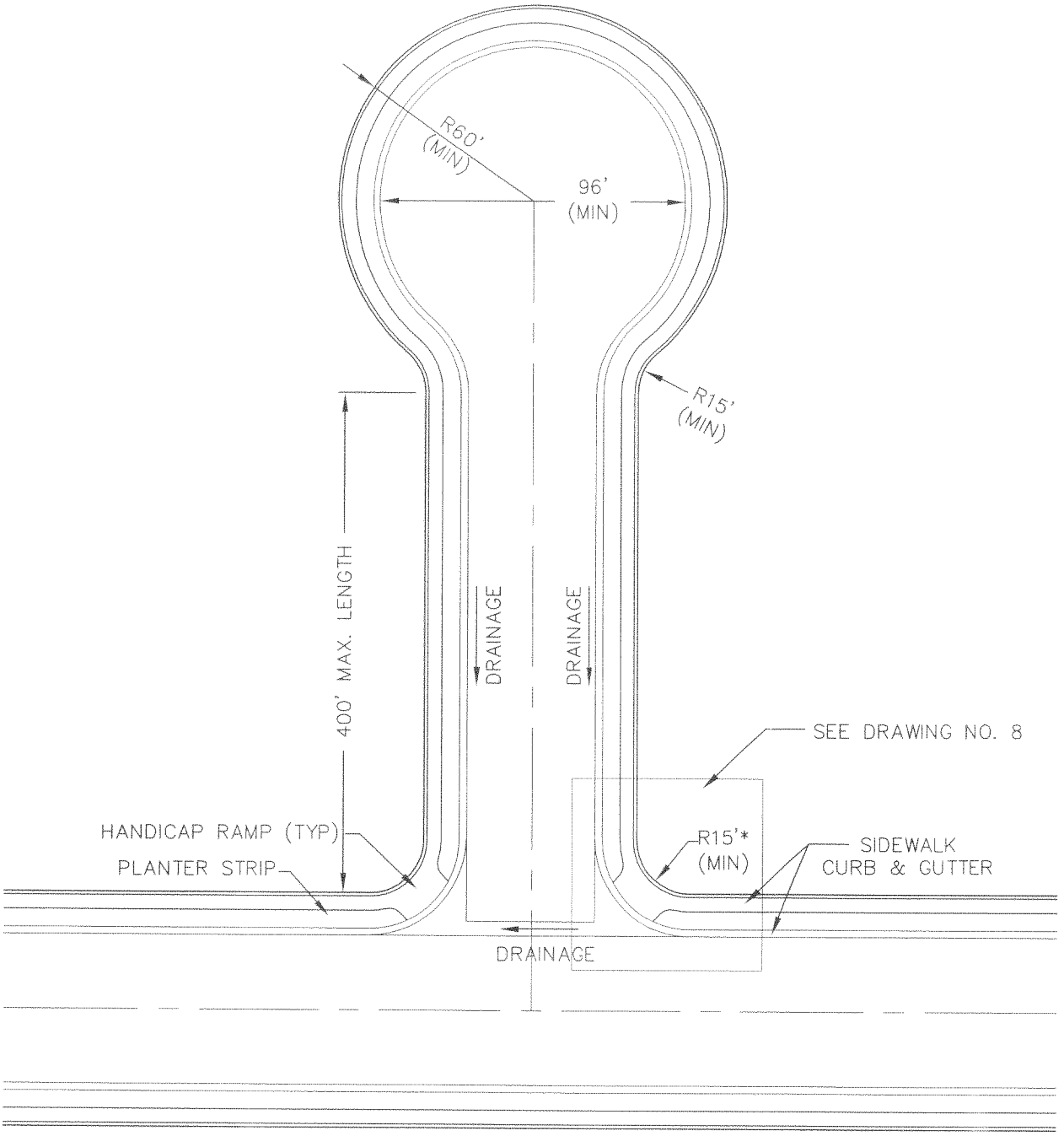

GENERAL NOTES:

INSTALL CATCH BASINS AND ASSOCIATED PIPING AS REQUIRED IN THE EVENT THE GRADE OF THE STREET SLOPES INTO THE CUL-DE-SAC.

* SEE TABLE ON DRAWING NO. 15.24 FOR PROPERTY LINE AND TBC RADIUS.

DRAWN: JRP	Northern ENGINEERING-LAND PLANNING -CONSTRUCTION MANAGEMENT 1040 E. 800 N. OREM, UTAH 84057 (801) 802-8992	AMERICAN FORK CITY	STANDARD DETAIL FOR CUL-DE-SAC	DRAWING NO. 15.7
REVISED:				
DATE: MAY 2002				
SCALE: VARIES				

K:\AMERICAN FORK STANDARDS\Drawings\FINAL\CUL-DE-SAC.dwg 05/12/2005 10:53:18 AM MDT

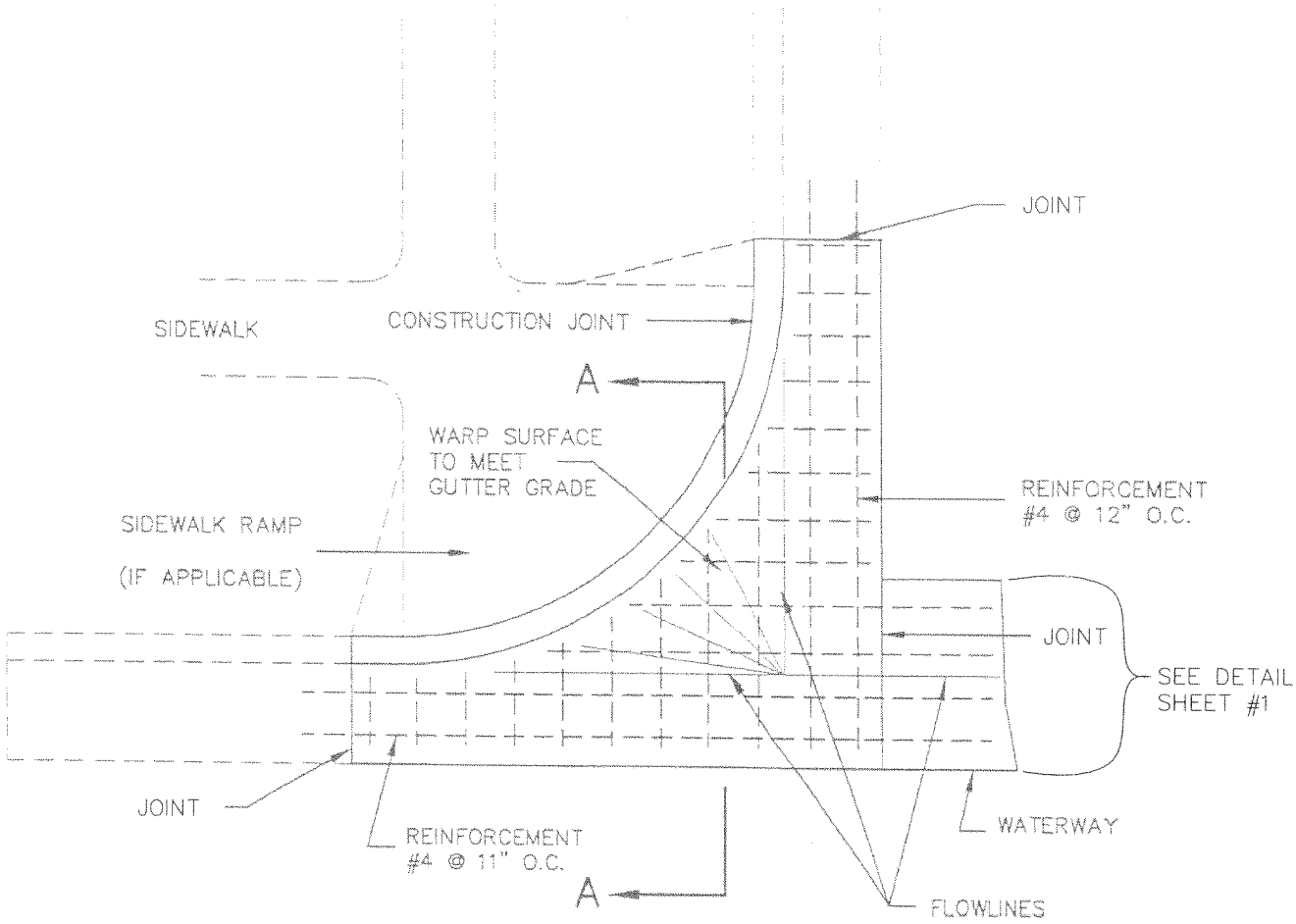

PLAN

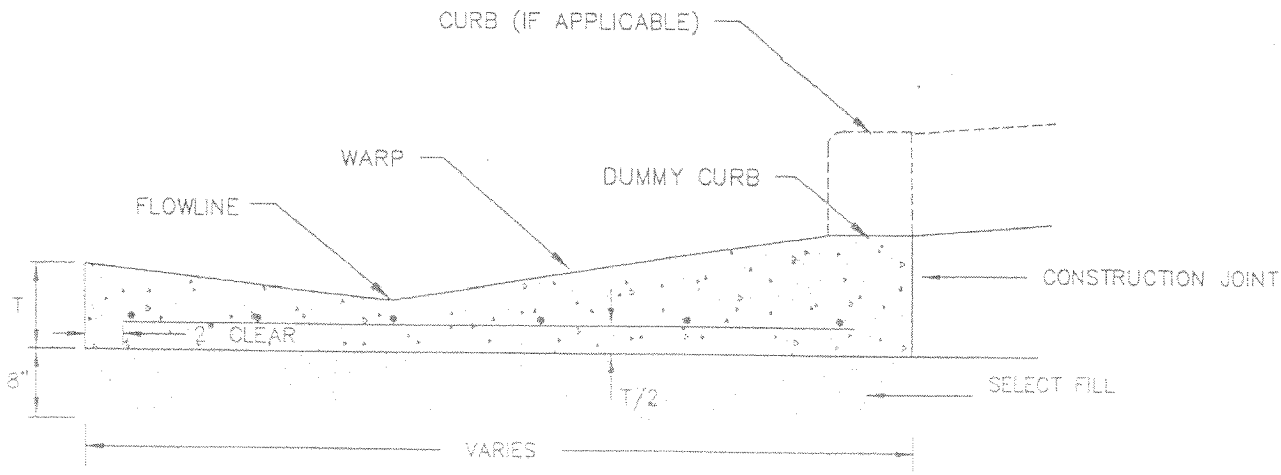

SECTION A—A

DRAWN: JRP	Northern ENGINEERING·LAND PLANNING ·CONSTRUCTION MANAGEMENT 1040 E. 800 N. OREM, UTAH 84057 (801) 802-8992	AMERICAN FORK CITY	STANDARD DETAIL FOR INTERSECTION RADIUS REBAR DETAIL	DRAWING NO. 15.8
REVISED:				
DATE: MAY 2002				
SCALE: VARIES				

K:\AMERICAN FORK STANDARDS\Drawings\FINAL\CUL-DE-SAC REBAR.dwg 05/12/2005 10:52:12 AM MDT

NOTE: SIDEWALK DEPTH SHALL BE 4" IN RESIDENTIAL ZONES; 6" ADJACENT TO RESIDENTIAL DRIVEWAY APPROACHES AND IN ALL COMMERCIAL AND INDUSTRIAL ZONES.

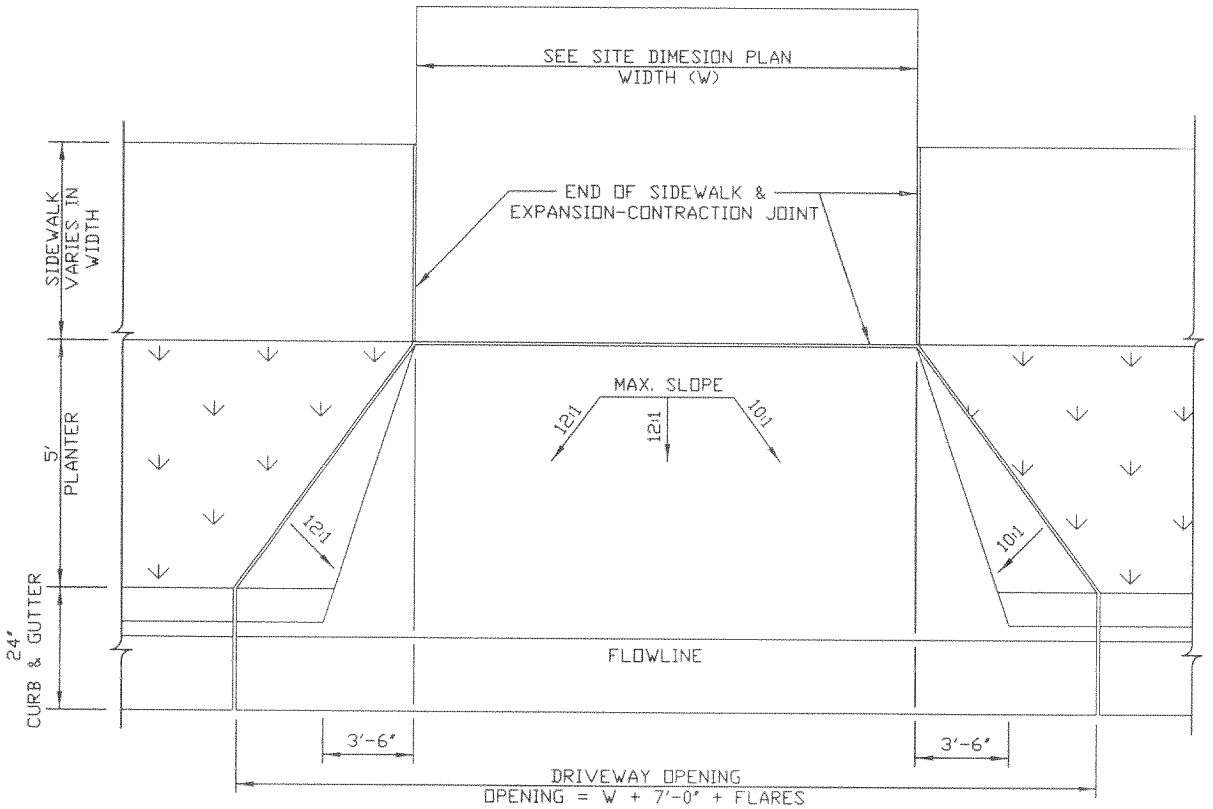

FLARED DRIVE APPROACH WITH PLANTER

-NTS-

DRAWN: JRP	Northern ENGINEERING-LAND PLANNING -CONSTRUCTION MANAGEMENT 1040 E. 800 N. OREM, UTAH 84057 (801) 802-8992	AMERICAN FORK CITY	STANDARD DETAIL FOR FLARED DRIVE APPROACH WITH PLANTER	DRAWING NO. 15.9
REVISED:				
DATE: MAY 2002				
SCALE: VARIES				

K:\AMERICAN FORK STANDARDS\Drawings\FINAL\FLARED DRIVE APPROACH.dwg 05/12/2005 10:59:39 AM MDT

NOTE: SIDEWALK DEPTH SHALL BE 4' IN RESIDENTIAL ZONES; 6' ADJACENT TO RESIDENTIAL DRIVEWAY APPROACHES AND IN ALL COMMERCIAL AND INDUSTRIAL ZONES.

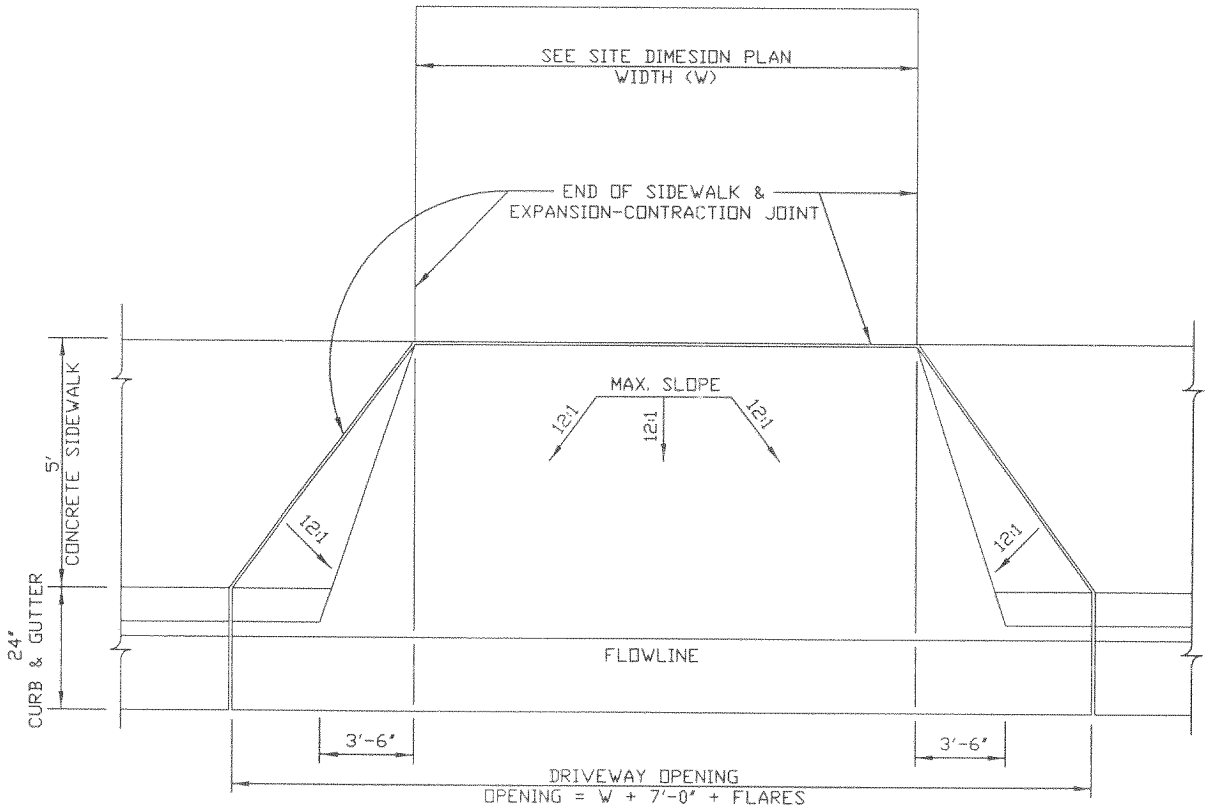

FLARED DRIVE APPROACH WITHOUT PLANTER

-NTS-

DRAWN: JRP	Northern ENGINEERING·LAND PLANNING ·CONSTRUCTION MANAGEMENT 1040 E. 800 N. OREM, UTAH 84057 (801) 802-8992	AMERICAN FORK CITY	STANDARD DETAIL FOR FLARED DRIVE APPROACH WITHOUT PLANTER	DRAWING NO. 15.10
REVISED:				
DATE: MAY 2002				
SCALE: VARIES				

K:\AMERICAN FORK STANDARDS\Drawings\FINAL\FLARED DRIVE APPR NO PL.dwg 05/12/2005 10:58:07 AM MDT

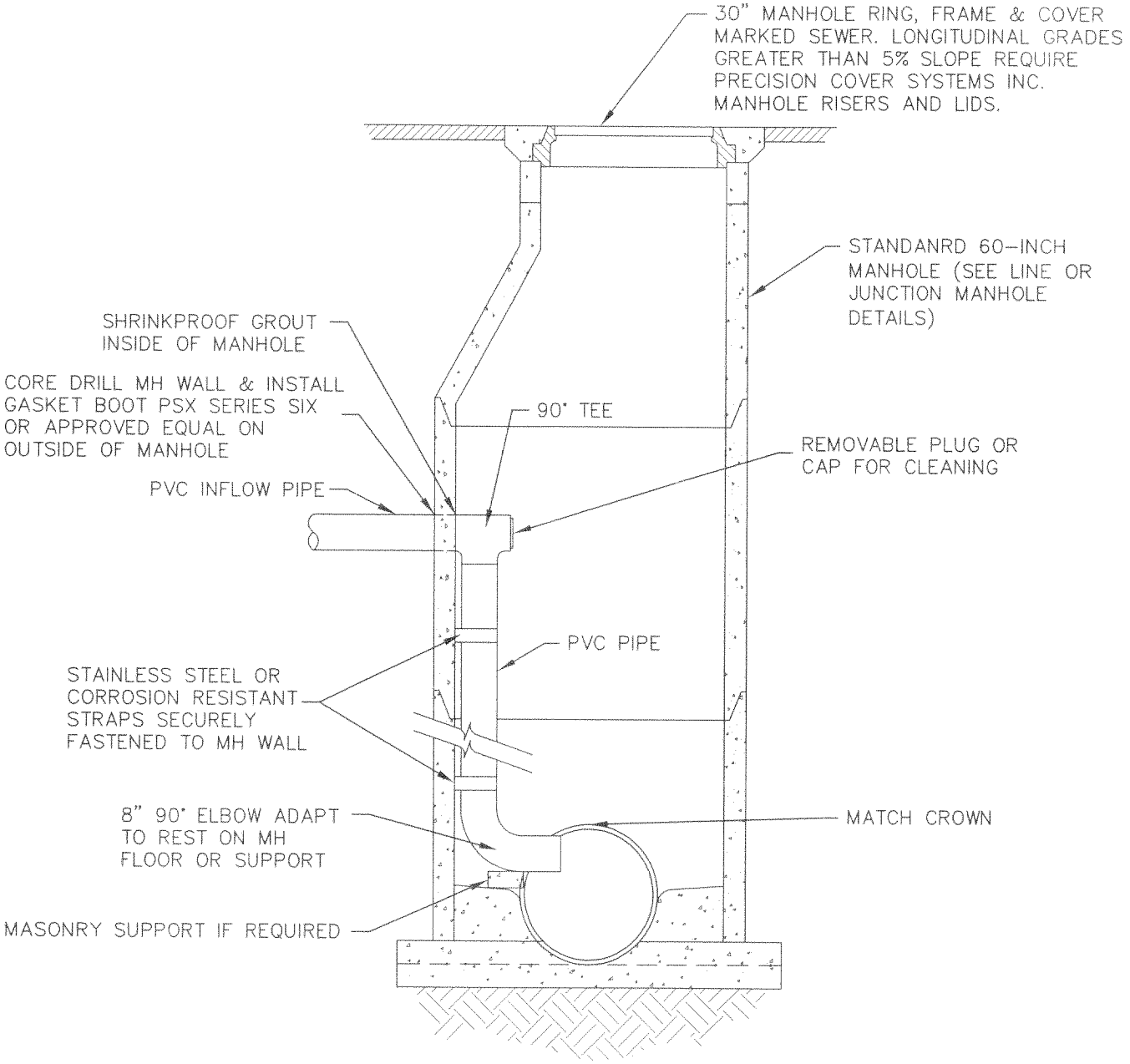

SANITARY SEWER DROP MANHOLE DETAIL

-NTS-

DRAWN: JRP	Northern ENGINEERING-LAND PLANNING -CONSTRUCTION MANAGEMENT 1040 E. 800 N. OREM, UTAH 84057 (801) 802-8992	AMERICAN FORK CITY	STANDARD DETAIL FOR SANITARY SEWER DROP MANHOLE DETAIL	DRAWING NO. 15.11
REVISED:				
DATE: JULY 2002				
SCALE: VARIES				

K:\AMERICAN FORK STANDARDS\Drawings\FINAL\SEWER-DROP MH.dwg 05/12/2005 11:07:35 AM MDT

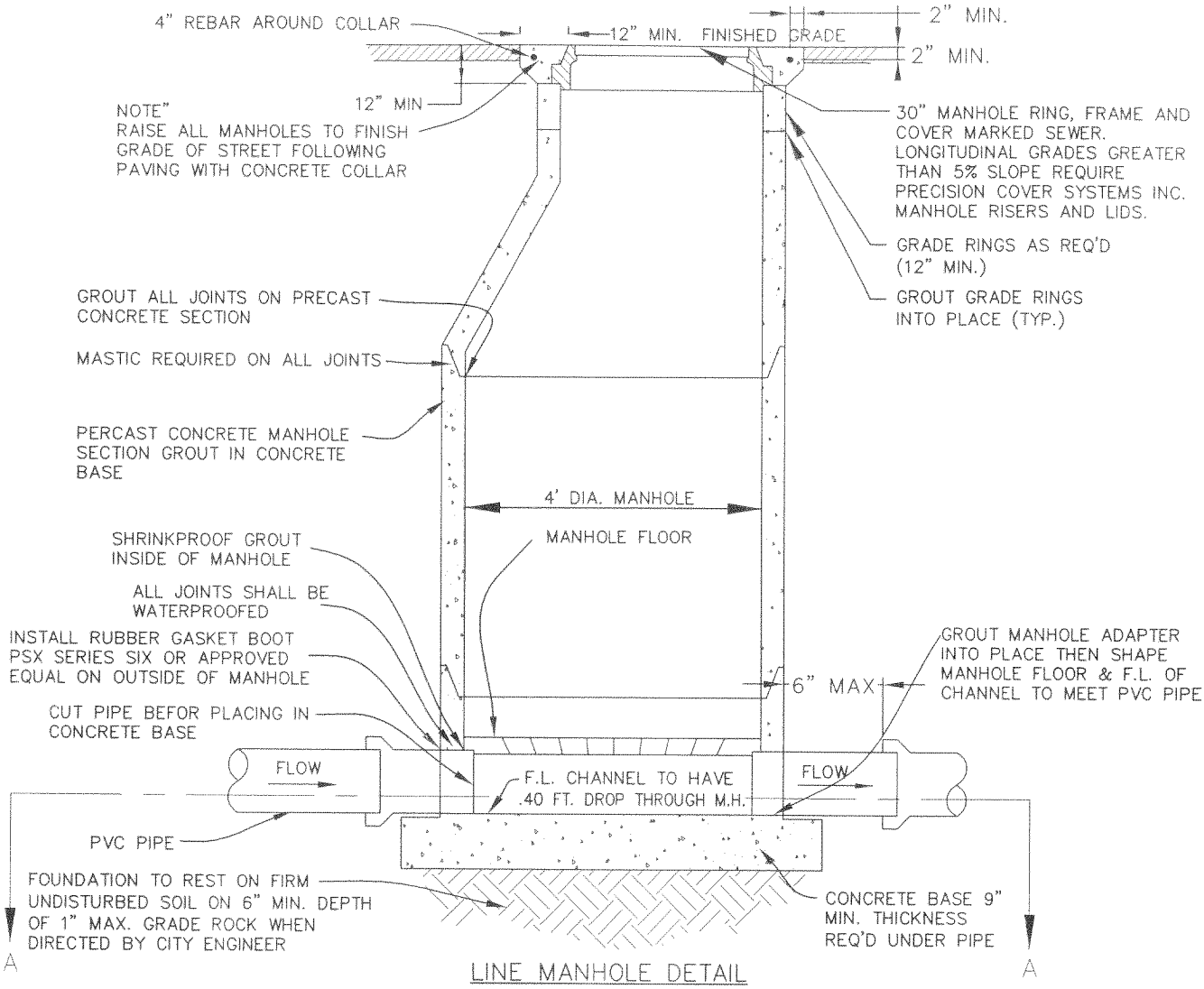

LINE MANHOLE DETAIL

--NTS--

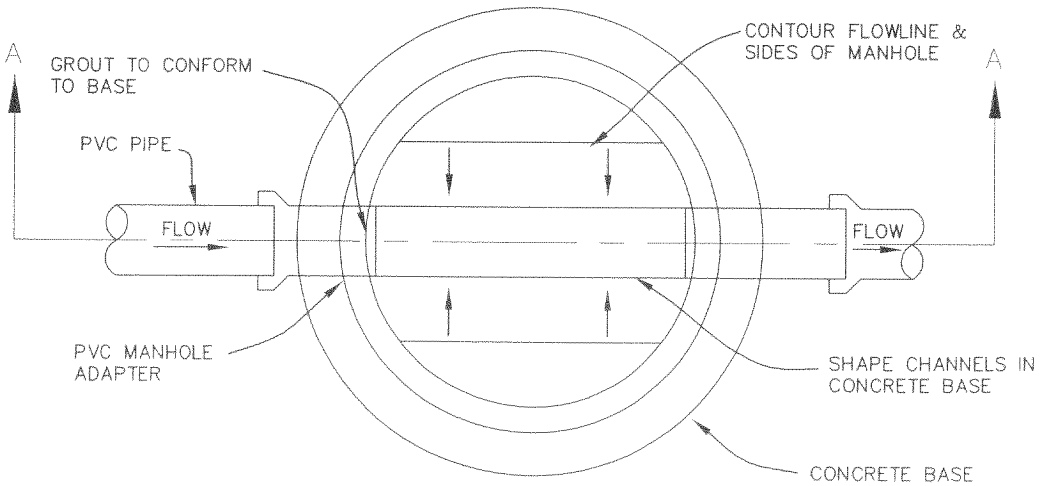

SECTION A–A

–NTS–

DRAWN: JRP REVISED: DATE: JULY 2002 SCALE: VARIES	Northern ENGINEERING-LAND PLANNING -CONSTRUCTION MANAGEMENT 1040 E. 800 N. OREM, UTAH 84057 (801) 802-8992	AMERICAN FORK CITY	STANDARD DETAIL FOR SANITARY SEWER LINE MANHOLE DETAIL	DRAWING NO. 15.12

K:\AMERICAN FORK STANDARDS\Drawings\FINAL\SEWER-LINE MH.dwg 05/12/2005 11:13:06 AM MDT

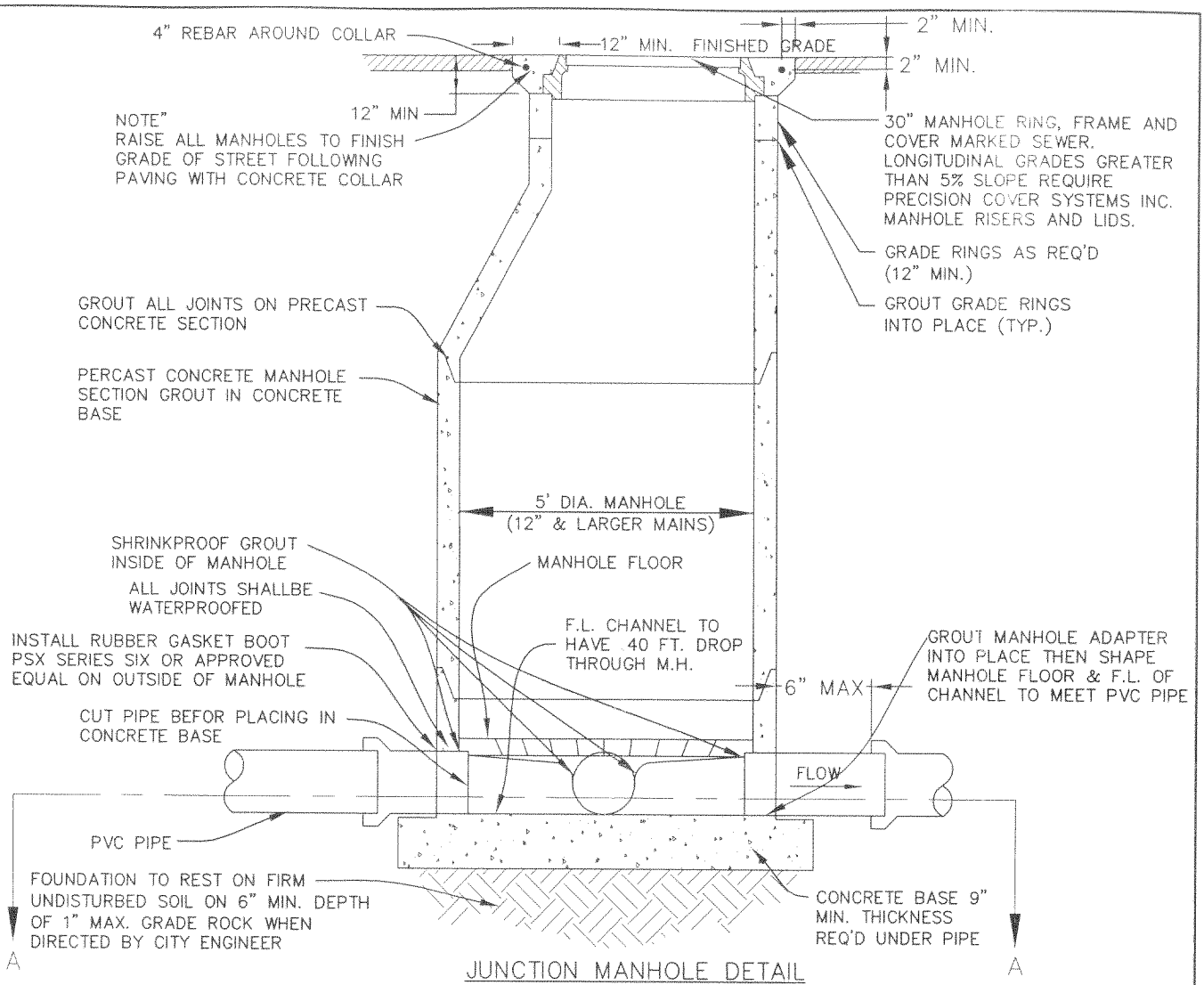

JUNCTION MANHOLE DETAIL

-NTS-

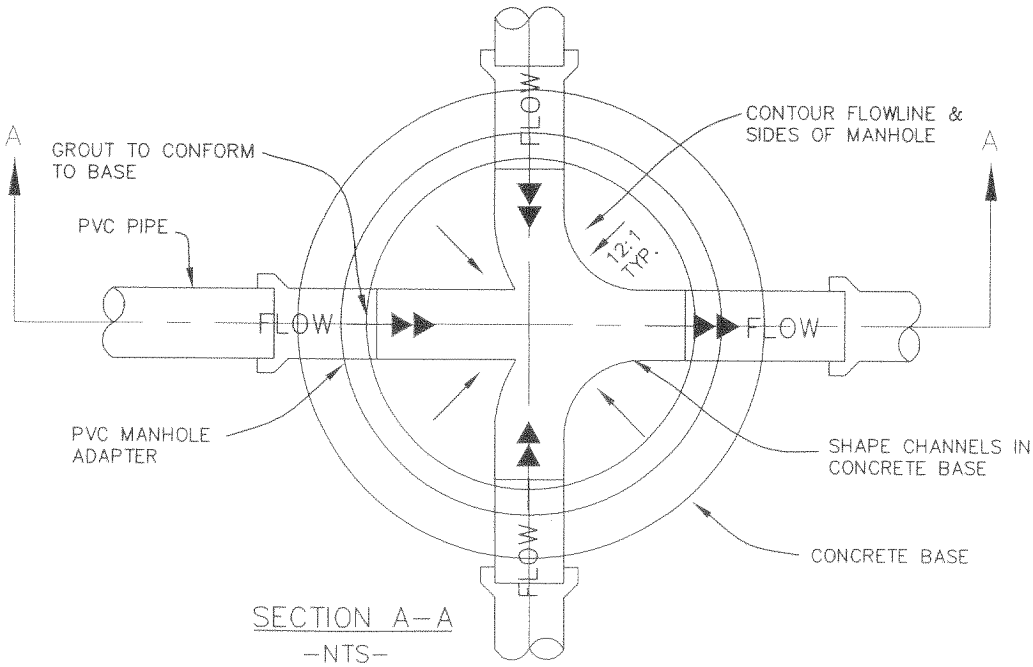

SECTION A-A

-NTS-

DRAWN: JRP	Northern ENGINEERING LAND PLANNING CONSTRUCTION MANAGEMENT 1040 E. 800 N. OREM, UTAH 84057 (801) 802-8992	AMERICAN FORK CITY	STANDARD DETAIL FOR SANITARY SEWER JUNCTION MANHOLE DETAIL	DRAWING NO. 15.13
REVISED:				
DATE: JULY 2002				
SCALE: VARIES				

K:\AMERICAN FORK STANDARDS\Drawings\FINAL\SEWER-JUNCTION MH.dwg 05/12/2005 11:09:25 AM MDT

NOTES:

1) MANHOLE BASE AND ALL SECTIONS SHALL BE PRECAST TO CONFORM TO ASTW C-478
2) THE SUMP SHALL BE CONCRETE.
3) THE PRETREATMENT MANHOLE SHALL BE CONSTRUCTED TO ENSURE WATER TIGHTNESS
4) THE SUMP SHALL BE LOCATED 5' OFFSET FORM MANHOLE PERPENDICULAR TO GUTTER ALIGNMENT
5) THE SUMP LID SHALL NOT BE LOCATED IN THE SIDEWALK SECTION.
6) ANY APPROVED EQUIVALENT REQUIRE CITY ENGINEER WRITTEN APPROVAL.

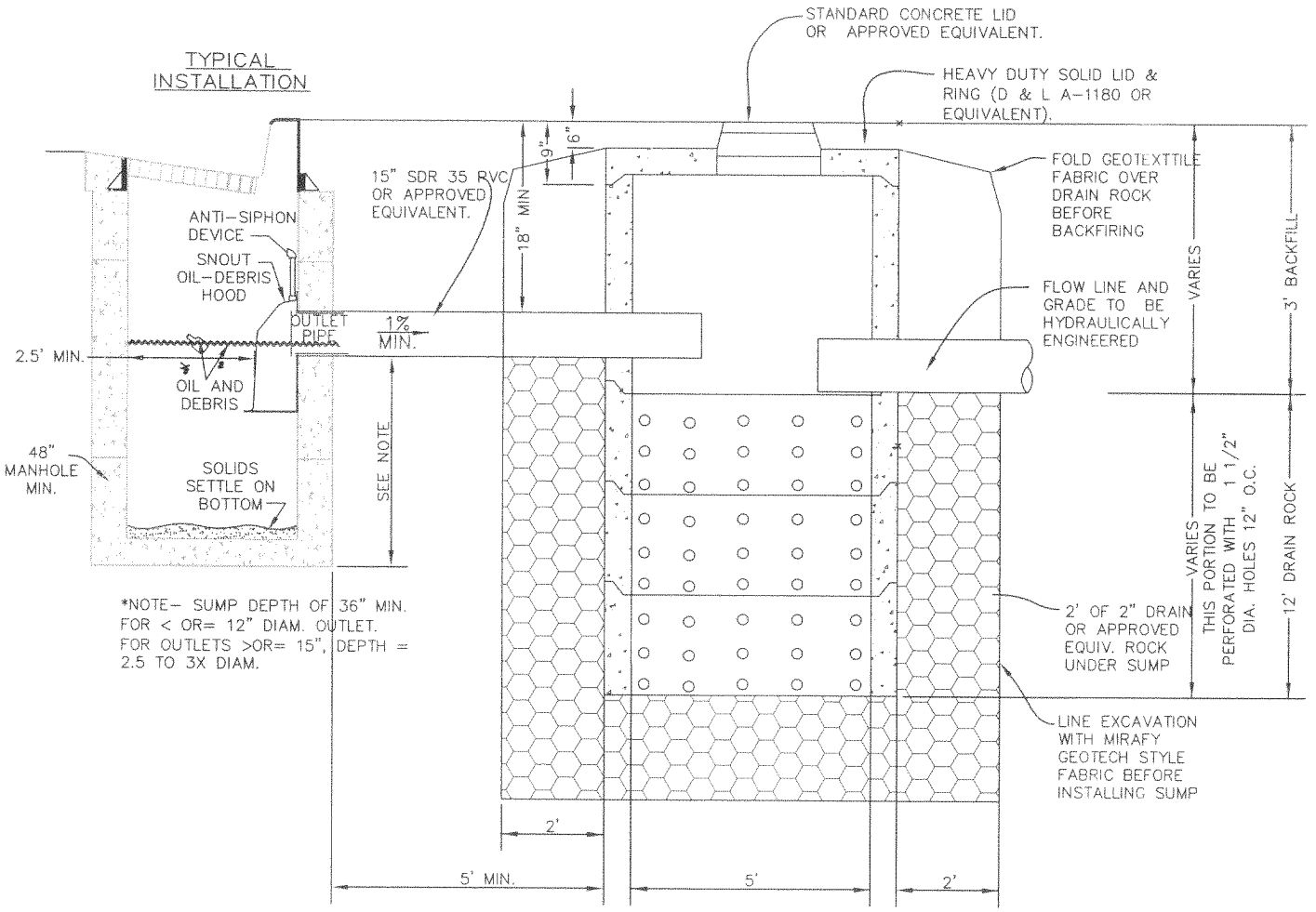

PRETREATMENT MANHOLE AND SUMP DETAIL

-NTS-

DRAWN: JRP	Northern ENGINEERING-LAND PLANNING -CONSTRUCTION MANAGEMENT 1040 E. 800 N. OREM, UTAH 84057 (801) 802-8992	AMERICAN FORK CITY	STANDARD DETAIL FOR PRETREATMENT MANHOLE AND SUMP	DRAWING NO. 15.14
REVISED:				
DATE: MAY 2002				
SCALE: VARIES				

K:\AMERICAN FORK STANDARDS\Drawings\FINAL\PRE-TREATMENT SUMP.dwg 05/12/2005 09:59:24 AM MDT

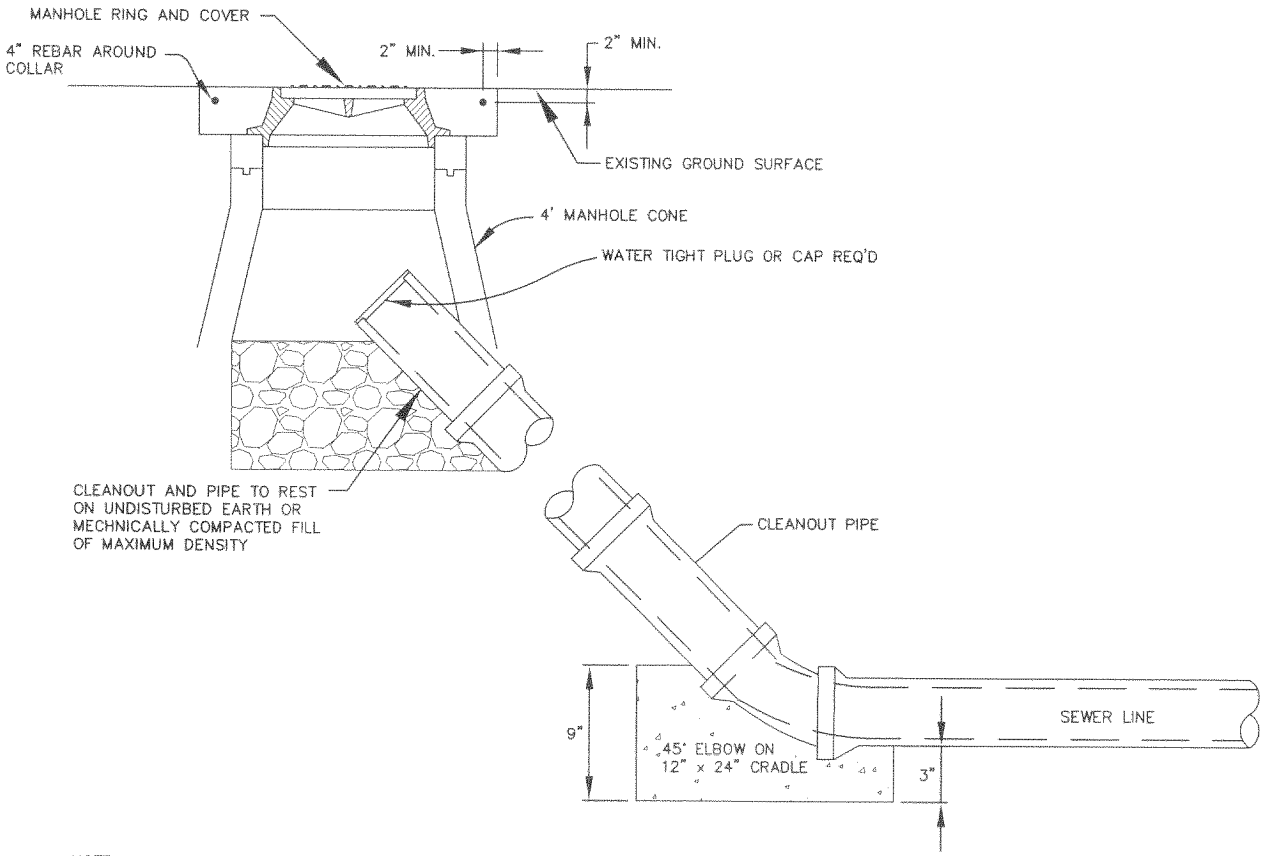

NOTE: ALL SEWER MANHOLES AND CLEANOUTS SHALL BE ACCESSIBLE BY MAINTENANCE PUMPER TRUCK.

DRAWN: JRP	Northern ENGINEERING-LAND PLANNING -CONSTRUCTION MANAGEMENT 1040 E. 800 N. OREM, UTAH 84057 (801) 802-8992	AMERICAN FORK CITY	STANDARD DETAIL FOR SEWER CLEANOUT SEWER PIPE INSTALLATION	DRAWING NO. 15.15
REVISED:				
DATE: MAY 2002				
SCALE: VARIES				

K:\AMERICAN FORK STANDARDS\Drawings\FINAL\SEWER CLEANOUT.dwg 05/12/2005 11:03:56 AM MDT

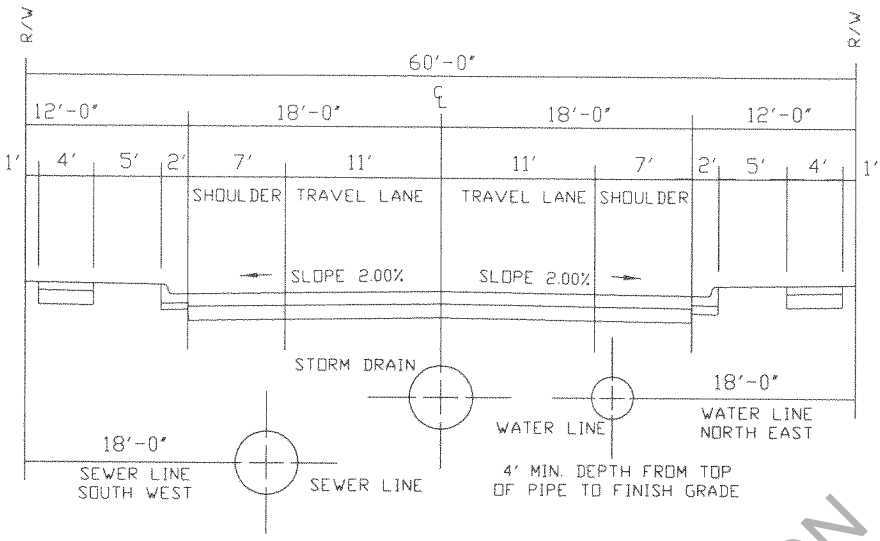

LOCAL - 60'

-NTS-

NEW SECTION
SEE 2014 TRANSPORTATION
MASTER PLAN

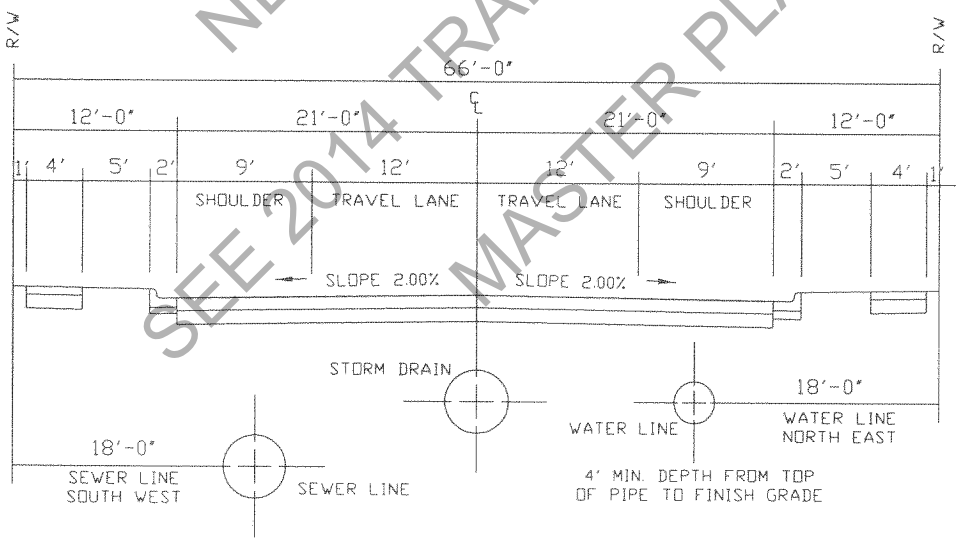

MINOR COLLECTOR - 66'

-NTS-

DRAWN: JRP	Northern ENGINEERING · LAND PLANNING · CONSTRUCTION MANAGEMENT 1040 E. 800 N. OREM, UTAH 84057 (801) 802-8992	AMERICAN FORK CITY	STANDARD DETAIL FOR LOCAL MINOR COLLECTOR	DRAWING NO. 15.16
REVISED:				
DATE: MAY 2002				
SCALE: VARIES				

K:\AMERICAN FORK STANDARDS\Drawings\FINAL\STR CROSS-SECTIONS-2.dwg 05/12/2005 11:18:35 AM MDT

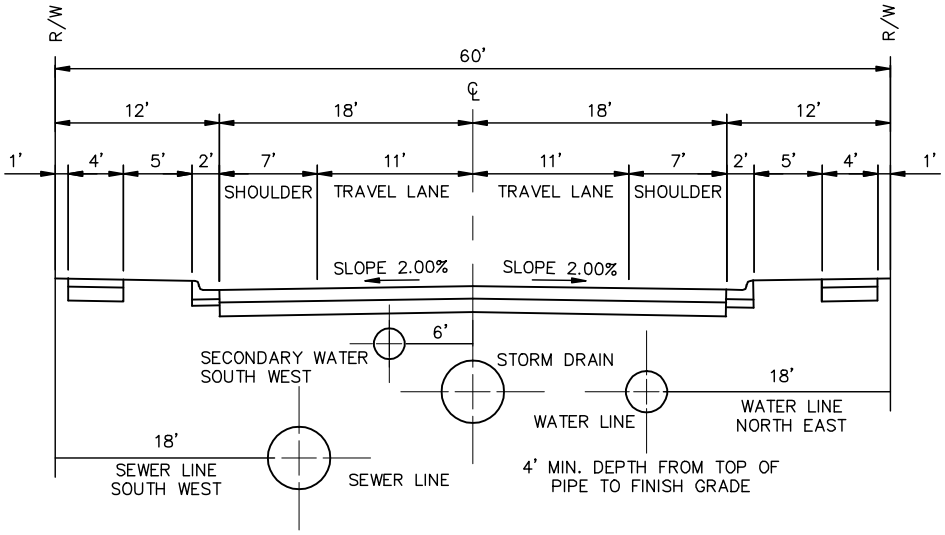

LOCAL – 60'

–NTS–

NEW SECTION
SEE 2014 TRANSPORTATION
MASTER PLAN

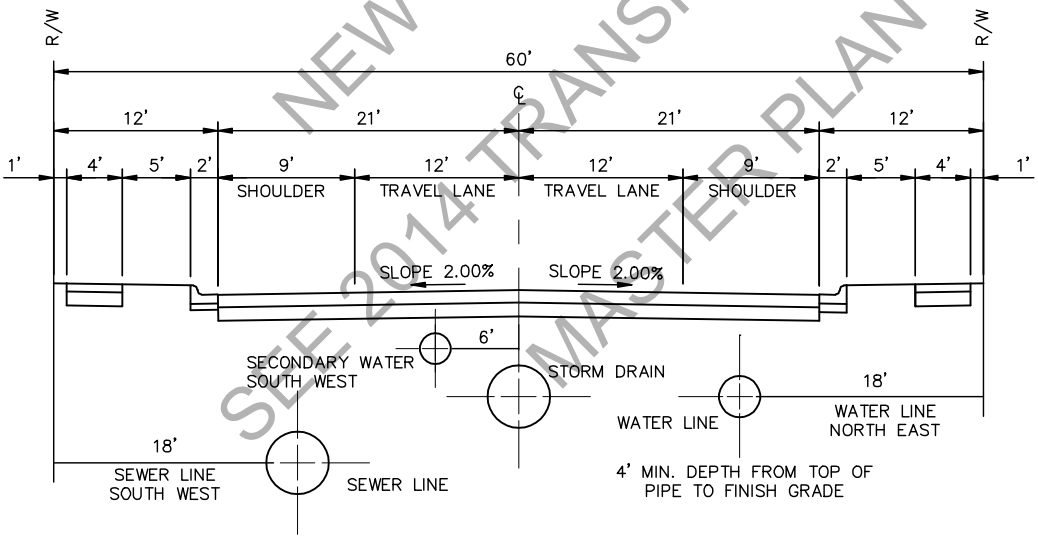

MINOR COLLECTOR – 66'

–NTS–

NOTE:
MINOR COLLECTOR IS STANDARD MINIMUM SECTION
FOR ALL COMMERCIAL/INDUSTRIAL AREAS.

DRAWN:	HORROCKS ENGINEERS — ONE WEST MAIN, P.O. BOX 377, AMERICAN FORK, (801) 763-5100	*AMERICAN FORK CITY*	STANDARD DETAIL FOR: LOCAL MINOR COLLECTOR	DRAWING NO. 15.16A
REVISED: 11/2010				
DATE:				
SCALE:				

O:\Client\118 American Fork General\Irrigation Standards\2010 Update\ AF STD 15.16A.dwg 11/18/10 11:07 skyless

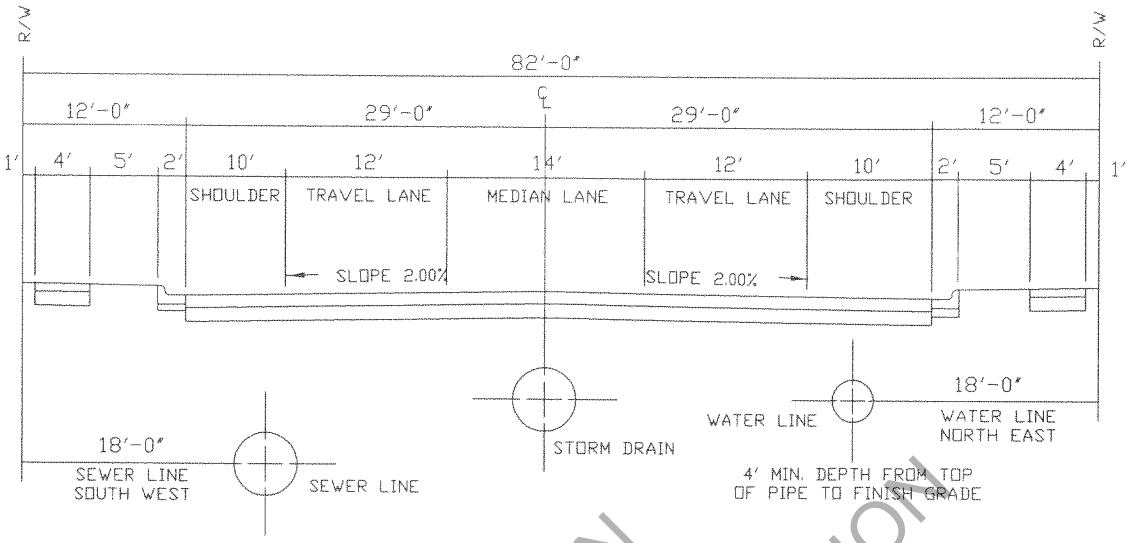

MAJOR COLLECTOR - 82'

-NTS-

NEW SECTION
SEE 2014 TRANSPORTATION
MASTER PLAN

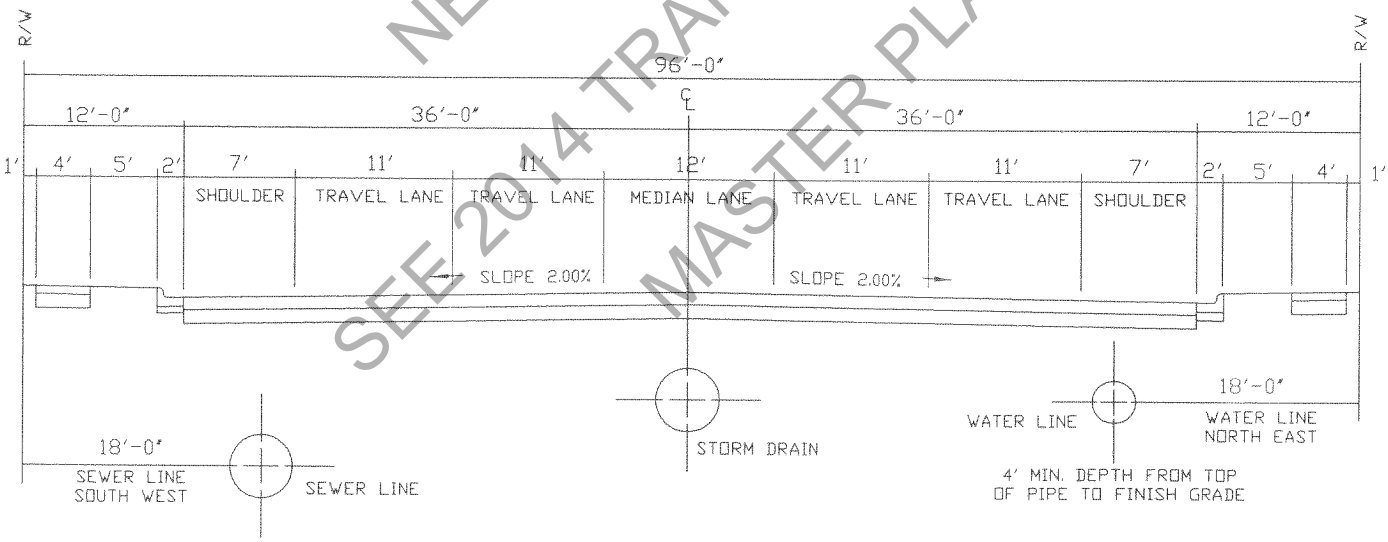

ARTERIAL - 96'

-NTS-

DRAWN: JRP	Northern ENGINEERING-LAND PLANNING -CONSTRUCTION MANAGEMENT 1040 E. 800 N. OREM, UTAH 84057 (801) 802-8992	AMERICAN FORK CITY	STANDARD DETAIL FOR MAJOR COLLECTOR ARTERIAL	DRAWING NO. 15.17
REVISED:				
DATE: MAY 2002				
SCALE: VARIES				

K:\AMERICAN FORK STANDARDS\Drawings\FINAL\STR CROSS-SECTIONS.dwg 05/12/2005 11:16:43 AM MDT

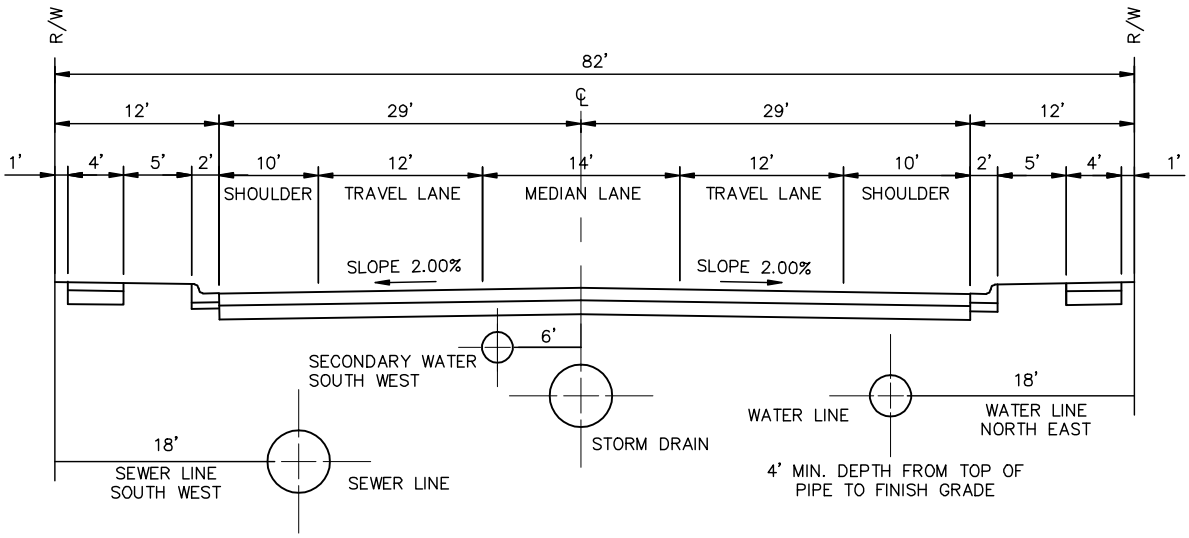

MAJOR COLLECTOR – 82'

–NTS–

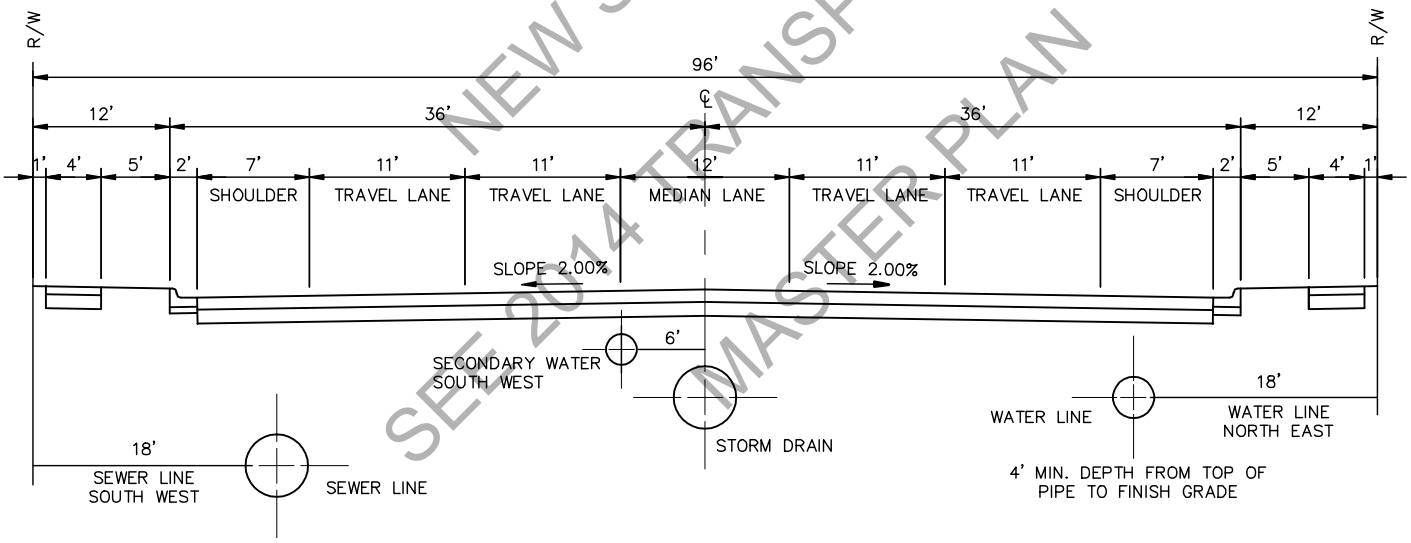

ARTERIAL – 96'

–NTS–

NEW SECTION
SEE 2014 TRANSPORTATION
MASTER PLAN

O:\Client\118 American Fork General\Irrigation Standards\2010 Update\ AF STD 15.17A.dwg 11/18/10 11:09 skyress

DRAWN:	HORROCKS ENGINEERS — ONE WEST MAIN, P.O. BOX 377, AMERICAN FORK, (801) 763-5100	*AMERICAN FORK CITY*	STANDARD DETAIL FOR: MAJOR COLLECTOR ARTERIAL	DRAWING NO. 15.17A
REVISED: 11/2010				
DATE:				
SCALE:				

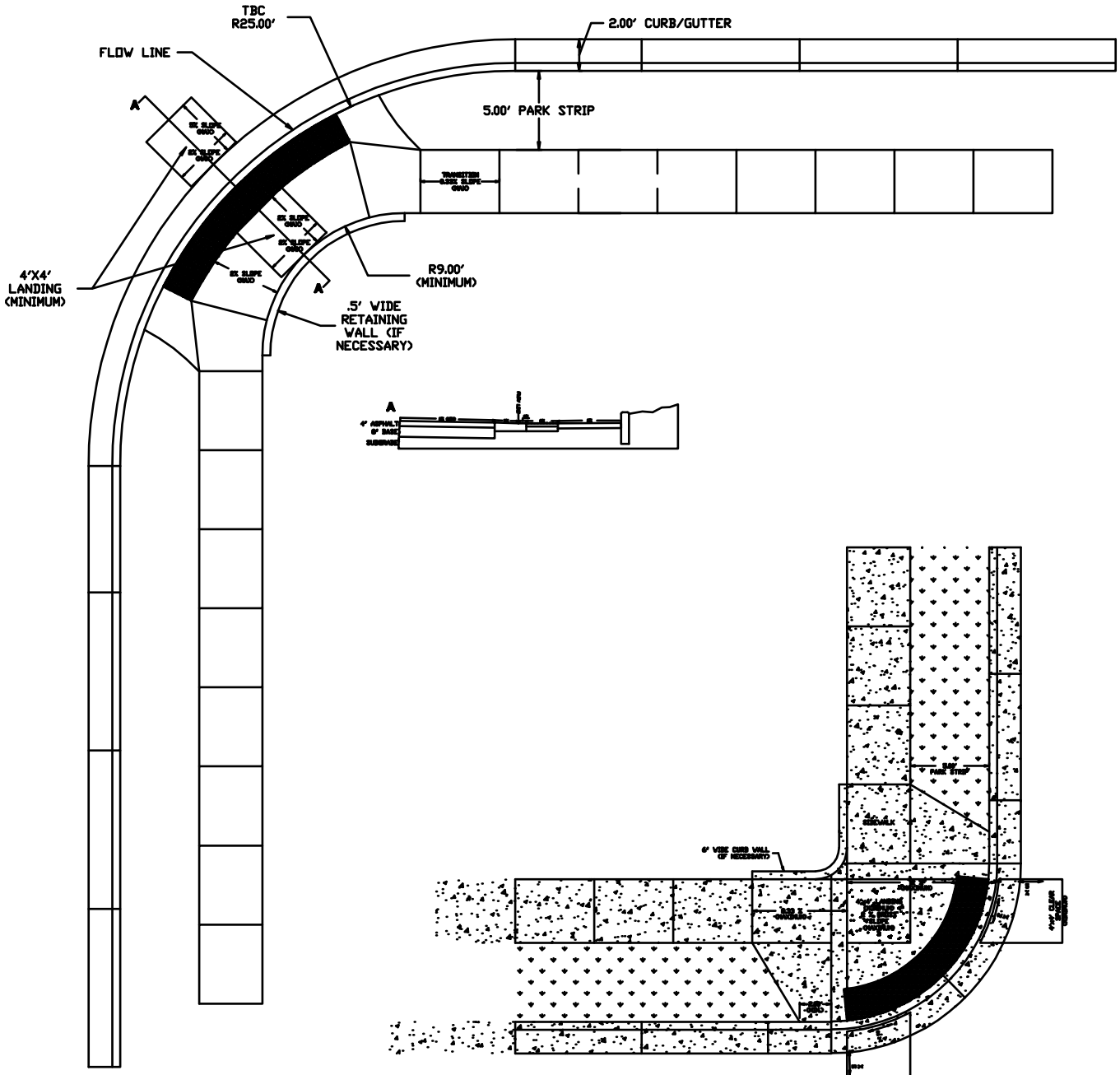

NOTES:

1. THE RAMP SHALL BE CONSTRUCTED USING CAST IRON TACTILE DOMES CAST TO MATCH THE RADIUS OF CURVE OR EQUAL AS APPROVE BY THE CITY ENGINEER.

2. PROVIDE DETECTABLE WARNING AREA PER APWA/ADAAG SPECIFICATIONS.

3. SEE APWA PLAN #235 FOR CONSTRUCTION DETAILS, SLOPES, ETC.

DRAWN: R.A.		AMERICAN FORK CITY	STANDARD DETAIL FOR	DRAWING NO.
REVISED:			SIDEWALK RAMP	15.18
DATE: APR. 2012				
SCALE: VARIES				

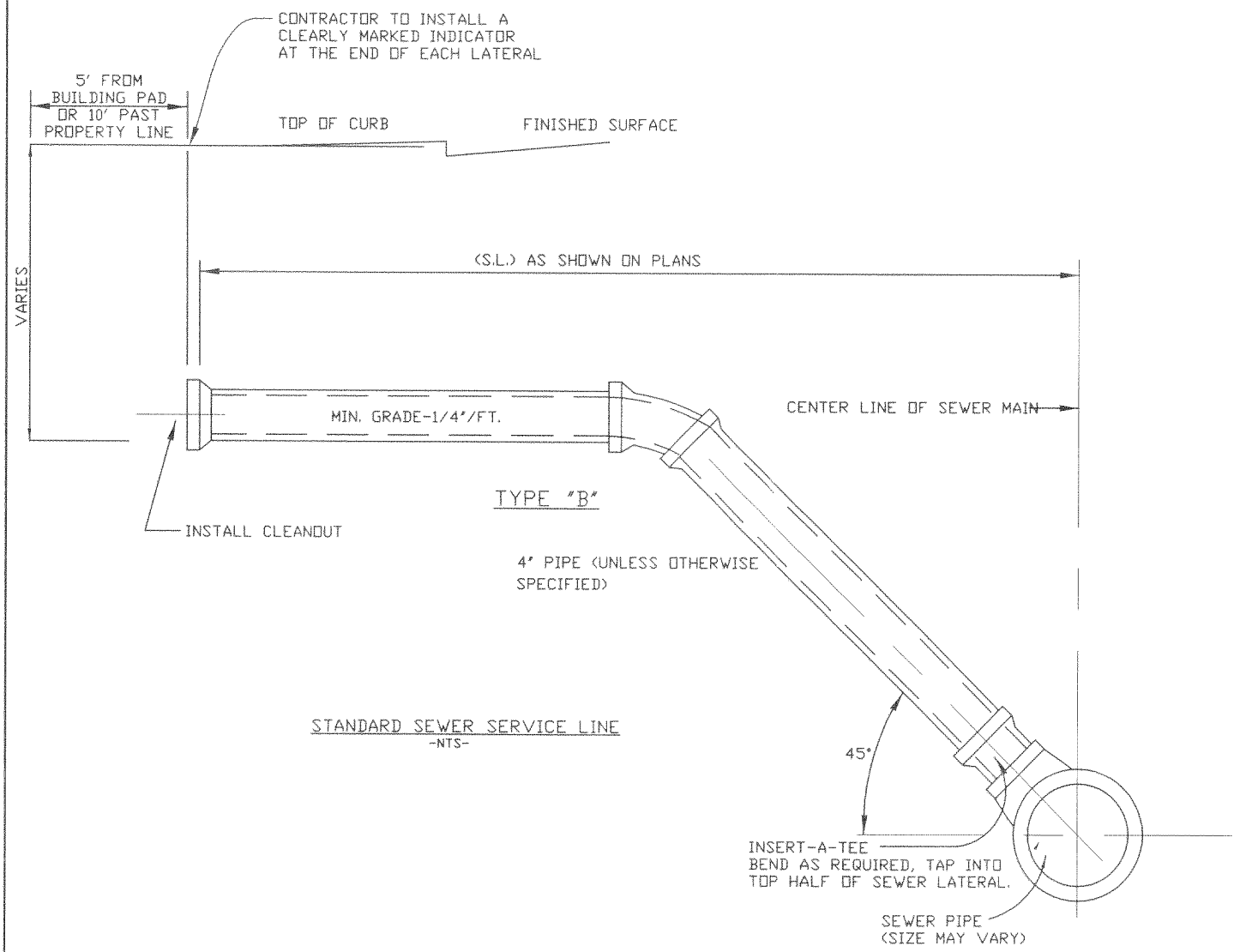

NOTE:
ALSO SEE DRAWING NO. 15.23

DRAWN: JRP	Northern ENGINEERING-LAND PLANNING -CONSTRUCTION MANAGEMENT 1040 E. 800 N. OREM, UTAH 84057 (801) 802-8992	AMERICAN FORK CITY	STANDARD DETAIL FOR STANDARD SEWER SERVICE LINE	DRAWING NO. 15.19
REVISED:				
DATE: MAY 2002				
SCALE: VARIES				

K:\AMERICAN FORK STANDARDS\Drawings\FINAL\SEWER SERVICE LINE.dwg 05/12/2005 11:06:03 AM MDT

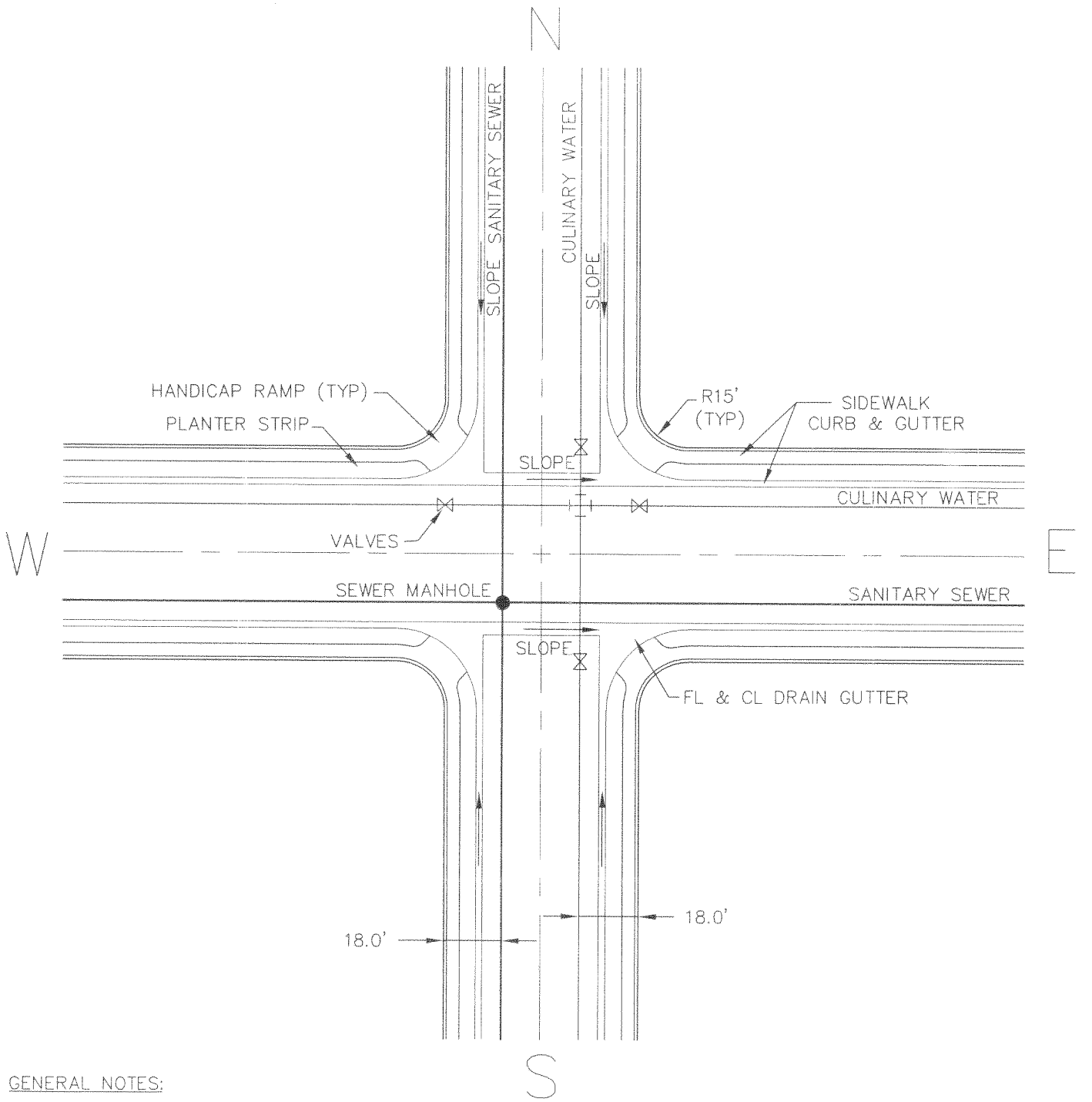

GENERAL NOTES:

1. INSTALL GATE VALVES AT EXTENSION OF PROPERTY LINES ON CULINARY WATER LINES OF THE SIZE AND TYPE IN COMPLIANCE WITH APPLICABLE AMERICAN FORK CITY SPECIFICATIONS AND DETAIL DRAWINGS.
2. INSTALL MANHOLE OF SIZE AND TYPE IN COMPLIANCE WITH APPLICABLE AMERICAN FORK CITY SPECIFICATIONS AND DETAIL DRAWINGS.
3. DEVIATIONS FROM UTILITY LOCATION AS DETAILED HEREIN MAY ONLY BE MADE AS APPROVED BY THE AMERICAN FORK CITY PUBLIC WORKS DIRECTOR.
4. SANITARY SEWER SHOULD BE LOCATED ON THE SOUTH AND WEST.
5. CULINARY WATER SHOULD BE LOCATED ON THE NORTH AND EAST.

DRAWN: JRP REVISED: DATE: MAY 2002 SCALE: VARIES	Northern ENGINEERING-LAND PLANNING -CONSTRUCTION MANAGEMENT 1040 E. 800 N. OREM, UTAH 84057 (801) 802-8992	AMERICAN FORK CITY	STANDARD DETAIL FOR STANDARD STREET INTERSECTION AND UTILITY LOCATION	DRAWING NO. 15.20

K:\AMERICAN FORK STANDARDS\Drawings\FINAL\STR INTER-UTIL.dwg 05/12/2005 11:22:29 AM MDT

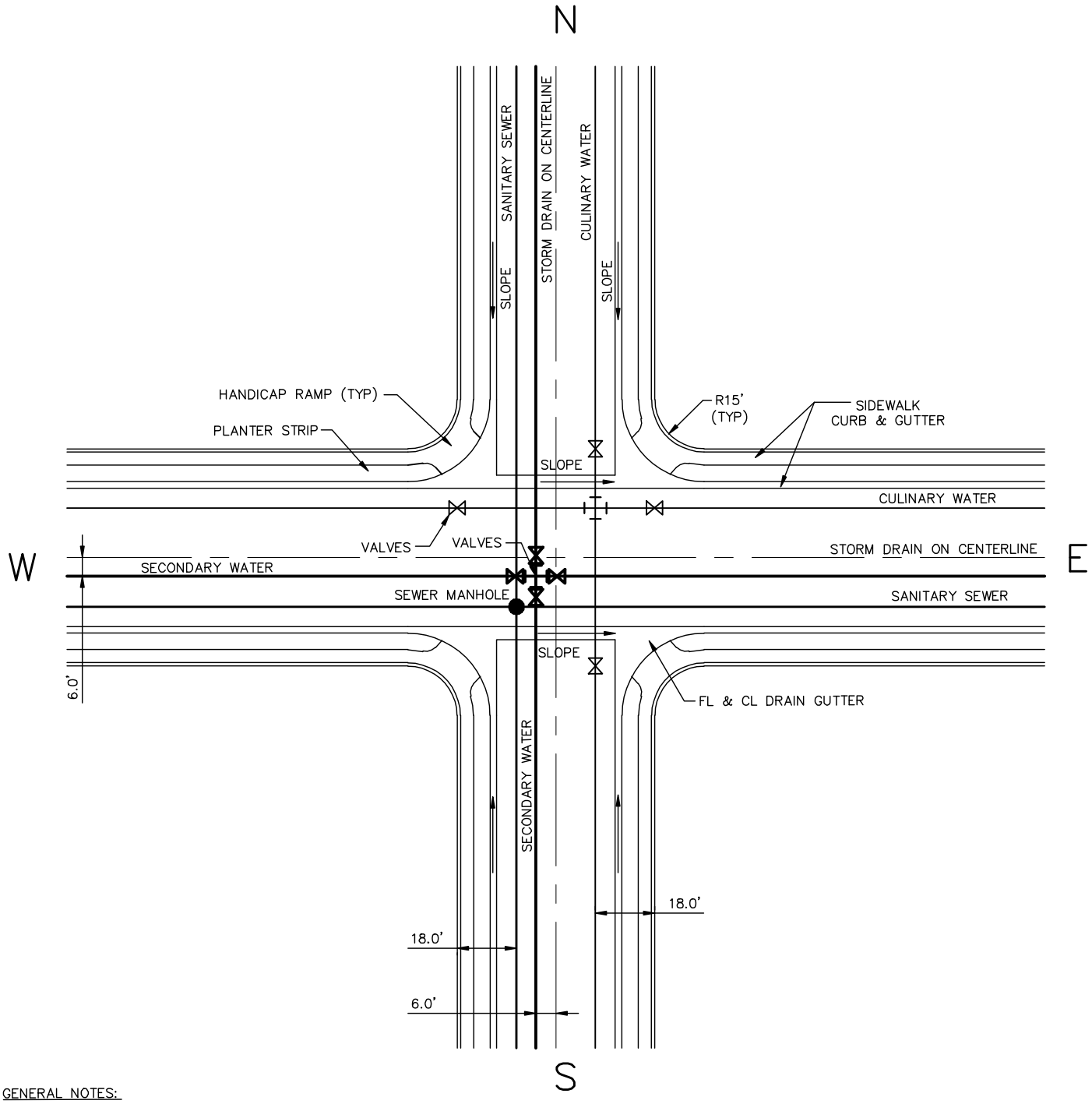

GENERAL NOTES:

1. INSTALL GATE VALVES AT EXTENSION OF PROPERTY LINES ON CULINARY WATER LINES OF THE SIZE AND TYPE IN COMPLIANCE WITH APPLICABLE AMERICAN FORK CITY SPECIFICATIONS AND DETAIL DRAWINGS.
2. INSTALL MANHOLE OF SIZE AND TYPE IN COMPLIANCE WITH APPLICABLE AMERICAN FORK SPECIFICATIONS AND DETAIL DRAWINGS.
3. DEVIATIONS FROM UTILITY LOCATION AS DETAILED HEREIN MAY ONLY BE MADE AS APPROVED BY THE AMERICAN FORK CITY PUBLIC WORKS DIRECTOR.
4. SANTITARY SEWER SHOULD BE LOCATED ON THE SOUTH AND WEST.
5. CULINARY WATER SHOULD BE LOCATED ON THE NORTH AND EAST.
6. SECONDARY WATER SHOULD BE LOCATED ON THE SOUTH AND WEST.
7. INSTALL SECONDARY WATER VALVES AT THE INTERSECTION OF THE CROSS OR TEE.

DRAWN:	HORROCKS ENGINEERS — ONE WEST MAIN, P.O. BOX 377, AMERICAN FORK, (801) 763-5100	AMERICAN FORK CITY	STANDARD DETAIL FOR: STANDARD STREET INTERSECTION AND UTILITY LOCATION	DRAWING NO. 15.20A
REVISED: 11/2010				
DATE:				
SCALE:				

O:\Client\118 American Fork General\Irrigation Standards\2010 Update\ AF STD 15.20A.dwg 11/18/10 11:10 skyless

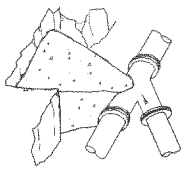

CONDITION III

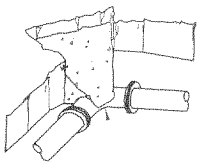

CONDITION II

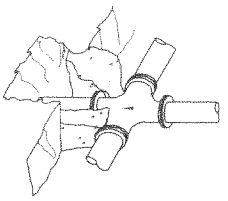

CONDITION V

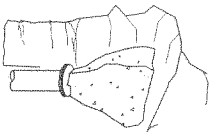

CONDITION VIII

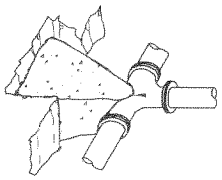

CONDITION I

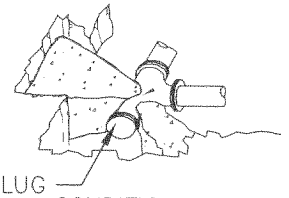

CONDITION VI

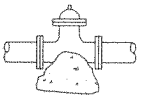

VALVE ANCHOR REQUIRED FOR VALVES 12" OR LARGER OR FLANGED THRUST RESTRAINT

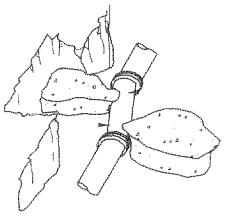

CONDITION IV

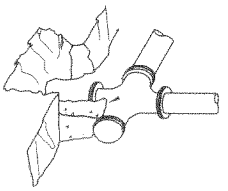

CONDITION VII

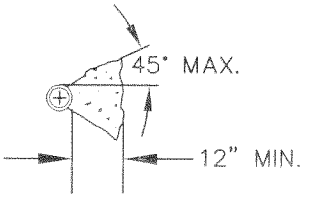

TYPICAL SECTION THROUGH THRUST BLOCKS

NOTES:

1. ALL THRUST BLOCK BEARING FACES SHALL BE POURED AGAINST UNDISTURBED SOIL OR APPROVED COMPACTED BACKFILL.
2. CONCRETE SHALL BE CLASS C.
3. CALCULATED ON 150 PSI. STATIC PRESSURE & ALLOWABLE BEARING PRESSURE OF 1500 LB. PER SQ. FT.
4. ALL THRUST BLOCK SIDES SHALL BE FORMED. (CITY INSPECTOR MAY REQUIRE WOOD FORMS.)

THRUST BLOCK BEARING AREA IN SQ. FEET

PIPE SIZE (IN.)	CONDITION							
	I	II	III	IV	V	VI	VII	VIII
4	1.5	1.8	1	0.5	1.3	1.3	1.3	1.3
8	5	7.1	3.8	2	5	5	5	5
10	7.8	11.1	6	3	7.8	7.8	7.8	7.8
14	15.4	21.7	11.8	6	15.4	15.4	15.4	15.4

WATER LINE THRUST BLOCK DETAILS

DRAWN: JRP REVISED: DATE: MAY 2002 SCALE: VARIES	Northern ENGINEERING-LAND PLANNING -CONSTRUCTION MANAGEMENT 1040 E. 800 N. OREM, UTAH 84057 (801) 802-8992	AMERICAN FORK CITY	STANDARD DETAIL FOR WATERLINE THRUST BLOCKING	DRAWING NO. 15.21

K:\AMERICAN FORK STANDARDS\Drawings\FINAL\THRUST BLOCK.dwg 05/12/2005 11:24:16 AM MDT

OPEN GROUND SURFACE RESTORATION: THE UPPER 8" OF THE BACKFILL SHALL BE CLEAN TOP SOIL. THE SOIL SHALL BE MOUNDED 4" ABOVE THE NATURAL GROUND SURFACE.

GRAVEL SURFACE RESTORATION: BACKFILL UPPER 6" OF TRENCH WITH 3/4" (-) CRUSHED GRAVEL. REMAINDER OF TRENCH AS SHOWN BELOW.

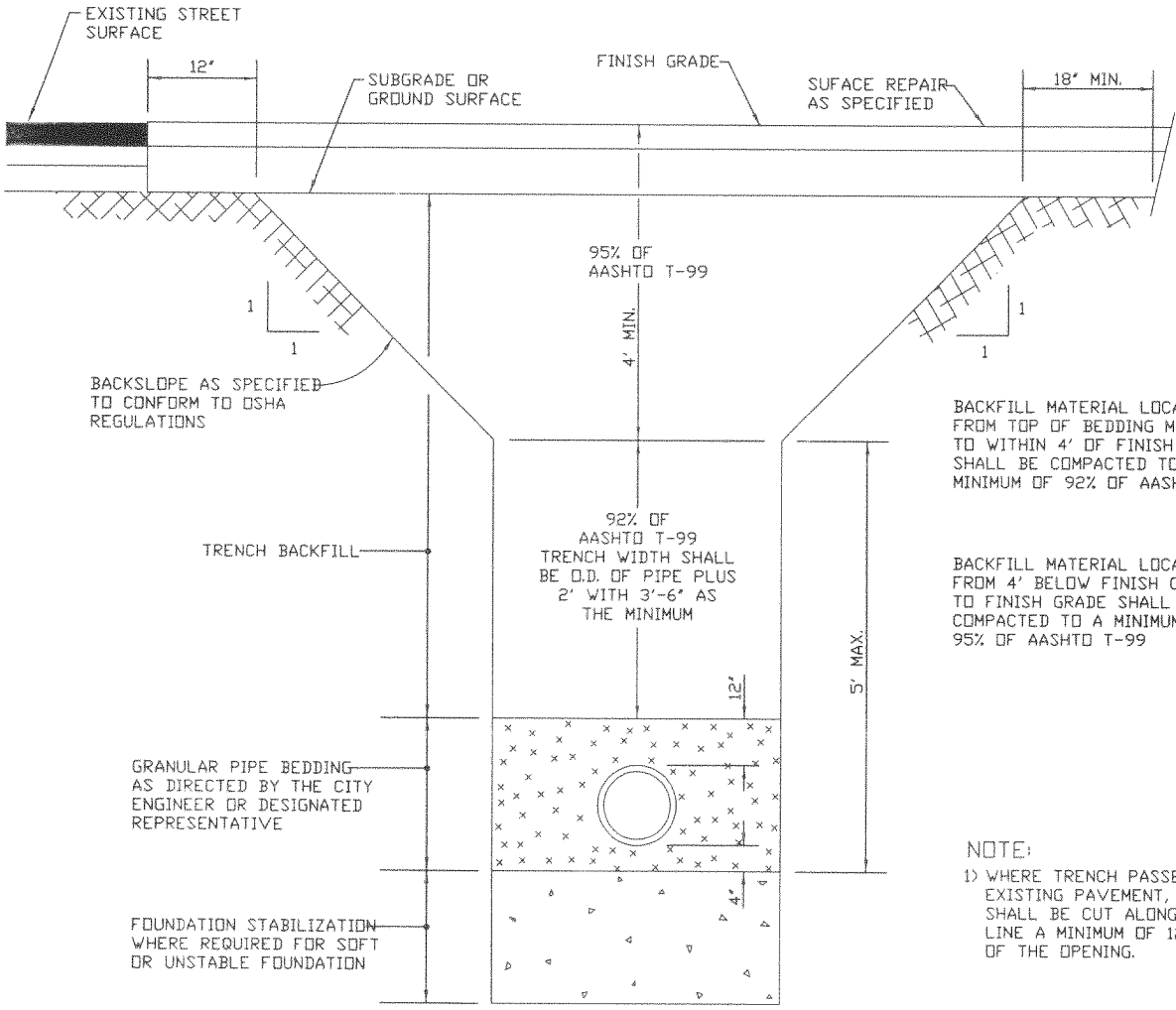

NOTE:

1) WHERE TRENCH PASSES THROUGH EXISTING PAVEMENT, THE PAVEMENT SHALL BE CUT ALONG A NEAT VERTICAL LINE A MINIMUM OF 12" FROM THE EDGE OF THE OPENING.

TYPICAL TRENCH DETAIL
-NTS-

DRAWN: JRP	Northern ENGINEERING-LAND PLANNING -CONSTRUCTION MANAGEMENT 1040 E. 800 N. OREM, UTAH 84057 (801) 802-8992	AMERICAN FORK CITY	STANDARD DETAIL FOR TYPICAL TRENCH DETAIL	DRAWING NO. 15.22
REVISED:				
DATE: MAY 2002				
SCALE: VARIES				

K:\AMERICAN FORK STANDARDS\Drawings\FINAL\TRENCH.dwg 05/12/2005 11:37:53 AM MDT

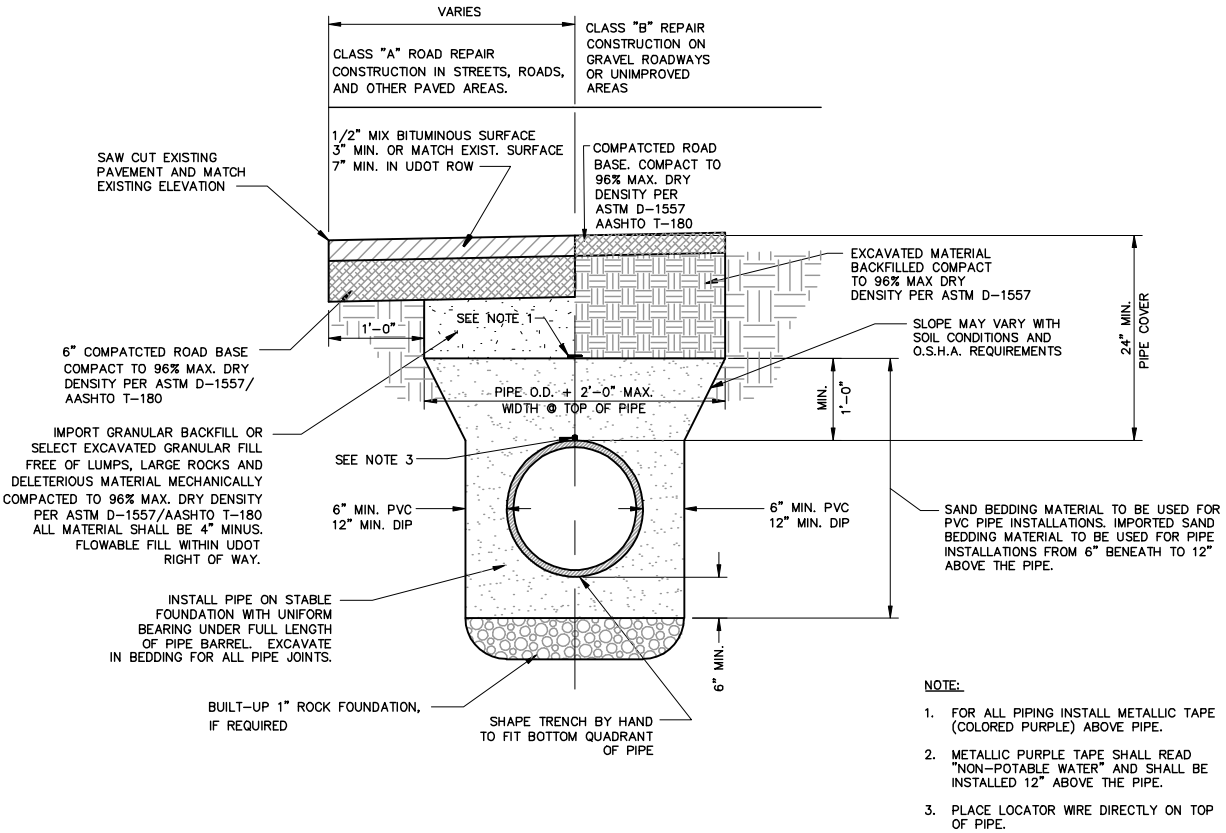

NOTE:

1. FOR ALL PIPING INSTALL METALLIC TAPE (COLORED PURPLE) ABOVE PIPE.
2. METALLIC PURPLE TAPE SHALL READ "NON-POTABLE WATER" AND SHALL BE INSTALLED 12" ABOVE THE PIPE.
3. PLACE LOCATOR WIRE DIRECTLY ON TOP OF PIPE.

TYPICAL SECONDARY WATER TRENCH DETAIL

DRAWN:	HORROCKS ENGINEERS — ONE WEST MAIN, P.O. BOX 377, AMERICAN FORK, (801) 763-5100	AMERICAN FORK CITY	STANDARD DETAIL FOR: TYPICAL SECONDARY WATER TRENCH DETAIL	DRAWING NO. 15.22A
REVISED: 11/2010				
DATE:				
SCALE:				

O:\Client\118 American Fork General\Irrigation Standards\2010 Update\ AF STD 15.22A.dwg 11/18/10 11:11 skylerss

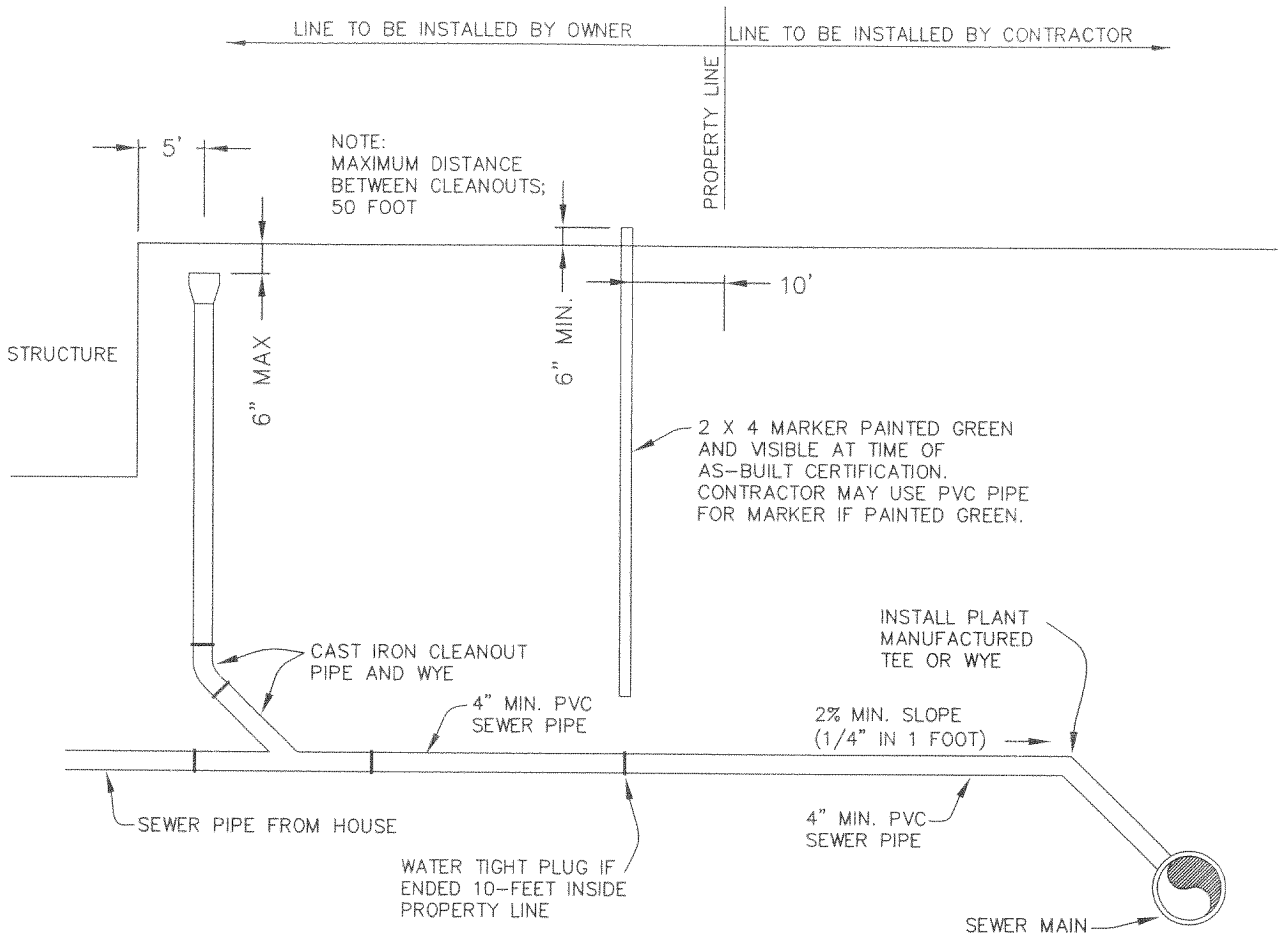

SEWER LATERAL DETAIL

-NTS-

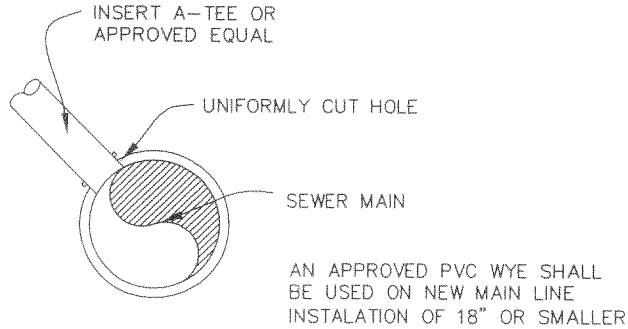

SEWER SURVICE LATERAL SADDLE

-NTS-

NOTE:
1) LATERAL SHALL NOT ENTER MANHOLE, UNLESS OTHERWISE APPROVED BY CITY ENGINEER.
2) FOR CONCRETE PIPE ADD CONCRETE COLLAR AROUND INSERT-A-TEE.
3) ALSO SEE DRAWING NO. 15.19

DRAWN: JRP REVISED: DATE: JULY 2002 SCALE: VARIES	Northern ENGINEERING-LAND PLANNING-CONSTRUCTION MANAGEMENT 1040 E. 800 N. OREM, UTAH 84057 (801) 802-8992	AMERICAN FORK CITY	STANDARD DETAIL FOR SANITARY SEWER LATERAL AND CLEAN OUT	DRAWING NO. 15.23

K:\AMERICAN FORK STANDARDS\Drawings\FINAL\SEWER-LATERAL.dwg 05/12/2005 11:11:31 AM MDT

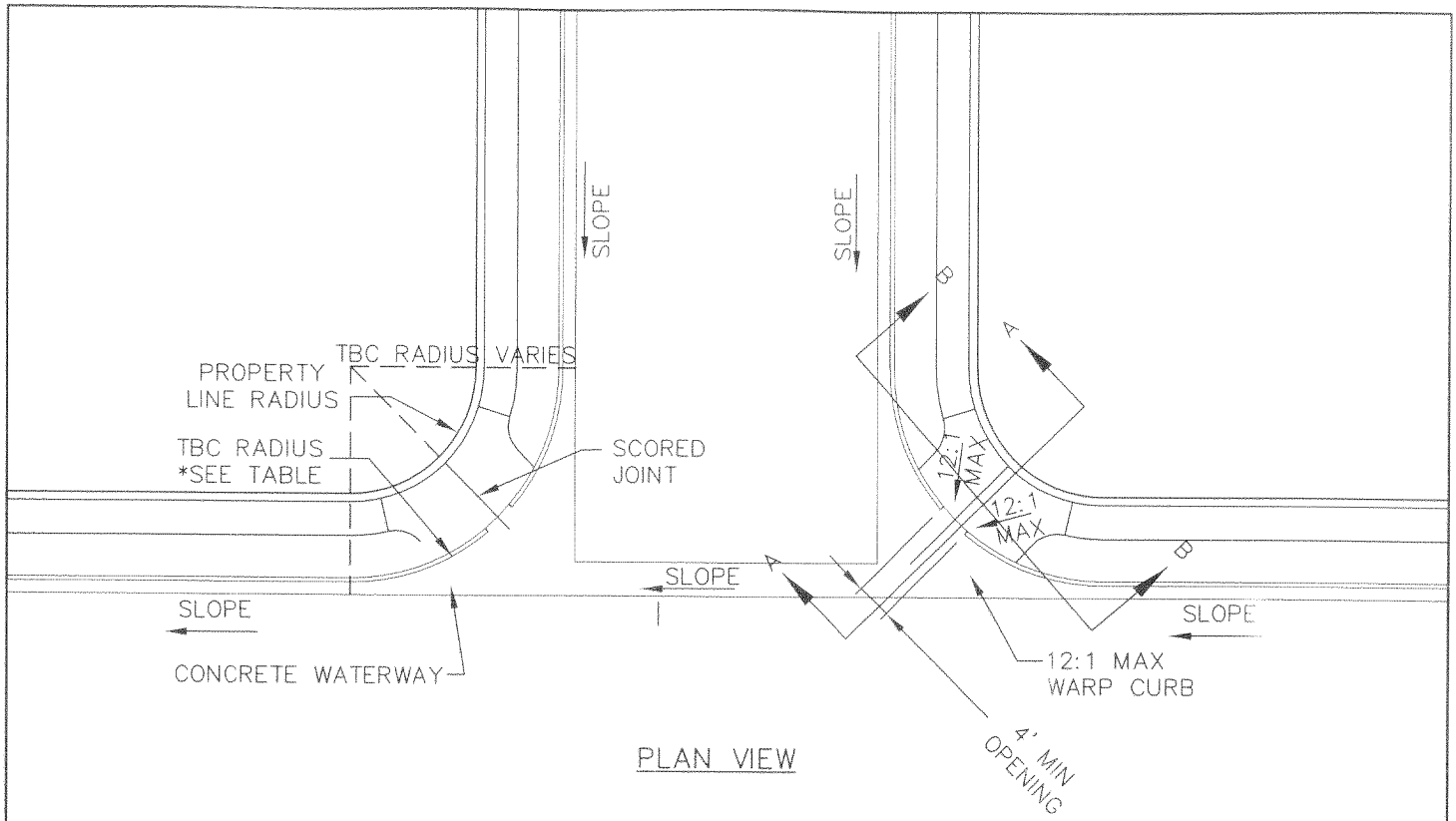

PLAN VIEW

ROADWAY CLASSIFICATION	TOP BACK CURB RADIUS (FEET)	PROPERTY LINE RADIUS (FEET)
ARTERIAL	40	30
COLLECTOR	30	20
LOCAL	25	15

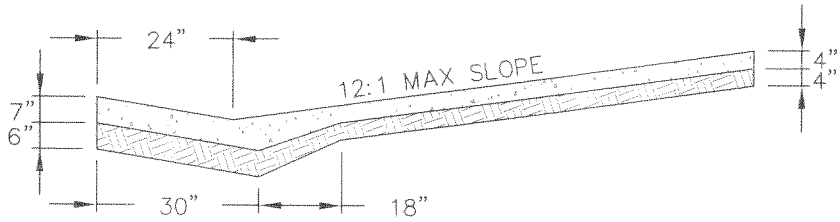

SECTION A–A

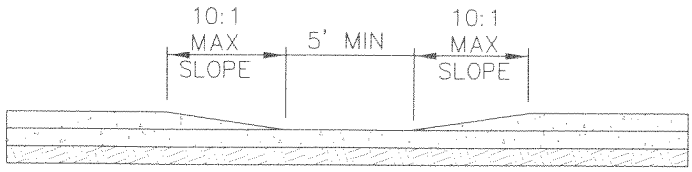

SECTION B–B

DRAWN: JRP	Northern ENGINEERING · LAND PLANNING · CONSTRUCTION MANAGEMENT 1040 E. 800 N. OREM, UTAH 84057 (801) 802-8992	AMERICAN FORK CITY	STANDARD DETAIL FOR STANDARD STREET INTERSECTION CORNER	DRAWING NO. 15.24
REVISED:				
DATE: MAY 2002				
SCALE: VARIES				

K:\AMERICAN FORK STANDARDS\Drawings\FINAL\STR INTER-CORNER.dwg 05/12/2005 11:20:39 AM MDT

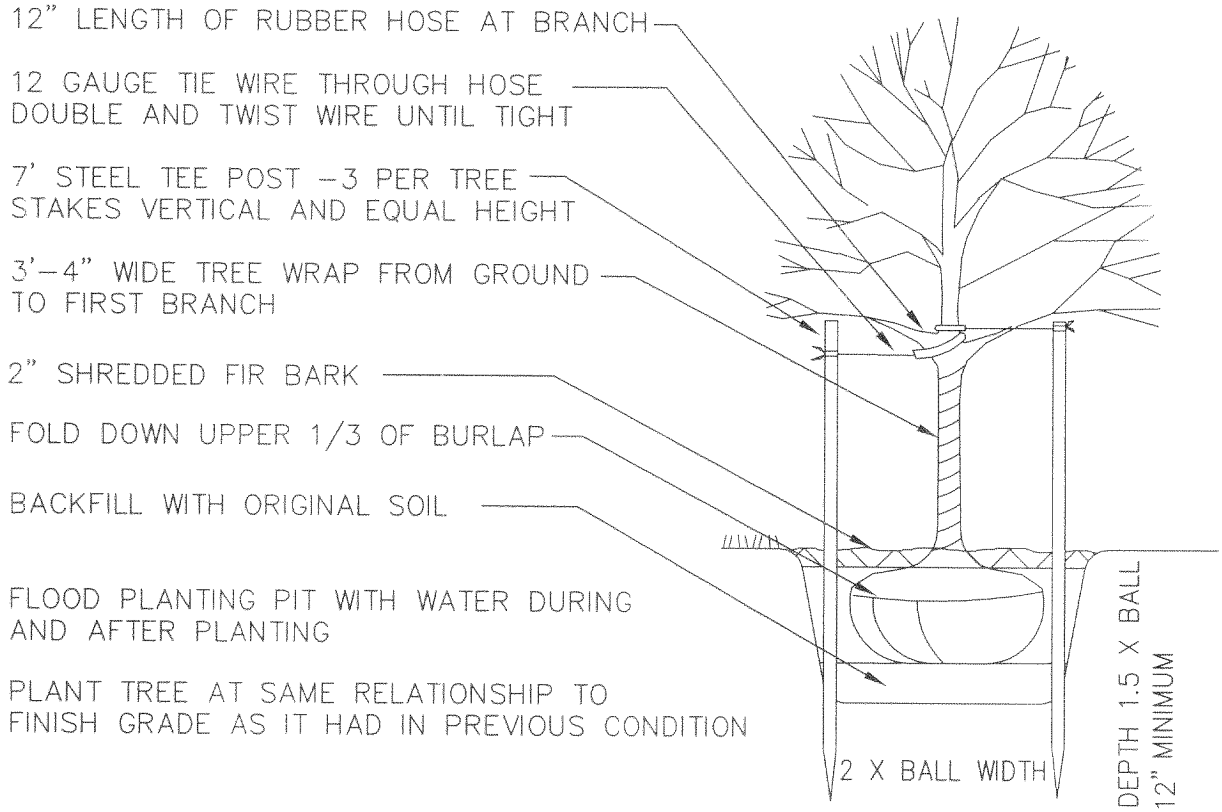

DECIDUOUS TREE PLANTING DETAIL

SCALE: NONE

DRAWN:	Northern ENGINEERING-LAND PLANNING -CONSTRUCTION MANAGEMENT 1040 E. 800 N. OREM, UTAH 84057 (801) 802-8992	AMERICAN FORK CITY	STANDARD DETAIL FOR DECIDUOUS TREE PLANTING DETAIL	DRAWING NO. 15.25
REVISED:				
DATE: FEB 2003				
SCALE: VARIES				

K:\AMERICAN FORK STANDARDS\Drawings\FINAL\TREE PLANTING DETAILS.dwg 05/12/2005 11:28:00 AM MDT

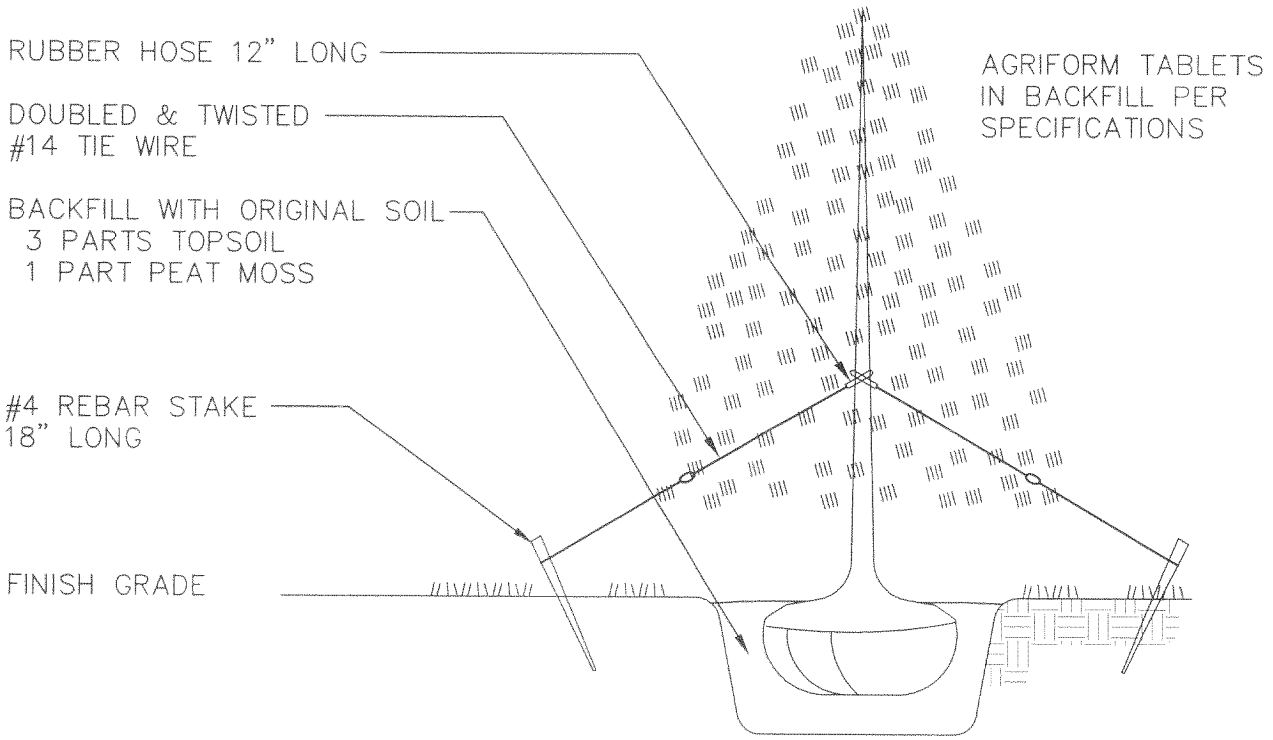

EVERGREEN TREE PLANTING DETAIL

SCALE: NONE

DRAWN:	Northern ENGINEERING-LAND PLANNING -CONSTRUCTION MANAGEMENT 1040 E. 800 N. OREM, UTAH 84057 (801) 802-8992	*AMERICAN FORK CITY*	STANDARD DETAIL FOR EVERGREEN TREE PLANTING DETAIL	DRAWING NO. 15.26
REVISED:				
DATE: FEB 2003				
SCALE: VARIES				

K:\AMERICAN FORK STANDARDS\Drawings\FINAL\TREE PLANTING DETAILS.dwg 05/12/2005 11:28:00 AM MDT

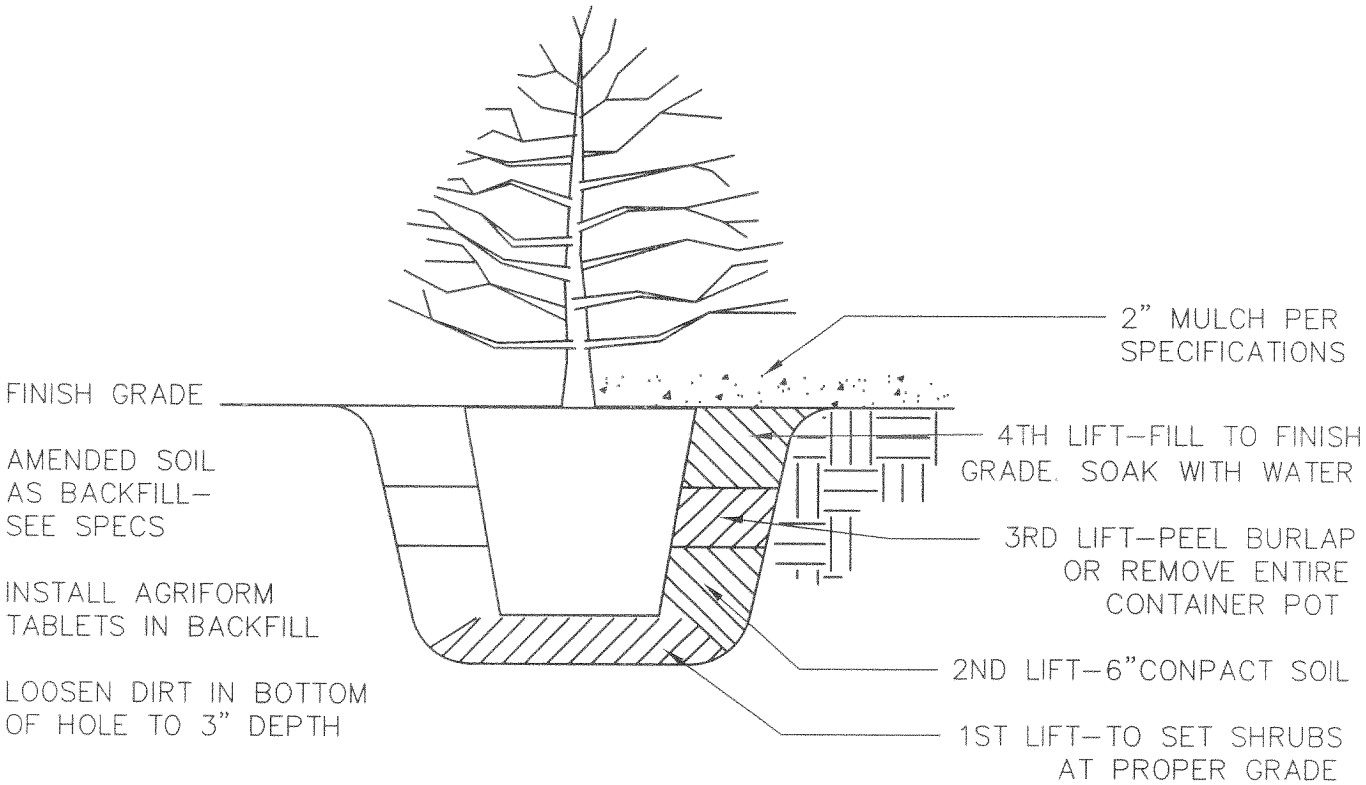

SHRUB PLANTING DETAIL

SCALE: NONE

DRAWN:	Northern ENGINEERING-LAND PLANNING -CONSTRUCTION MANAGEMENT 1040 E. 800 N. OREM, UTAH 84057 (801) 802-8992	*AMERICAN FORK CITY*	STANDARD DETAIL FOR SHRUB PLANTING DETAIL	DRAWING NO. 15.27
REVISED:				
DATE: FEB 2003				
SCALE: VARIES				

K:\AMERICAN FORK STANDARDS\Drawings\FINAL\TREE PLANTING DETAILS.dwg 05/12/2005 11:28:00 AM MDT

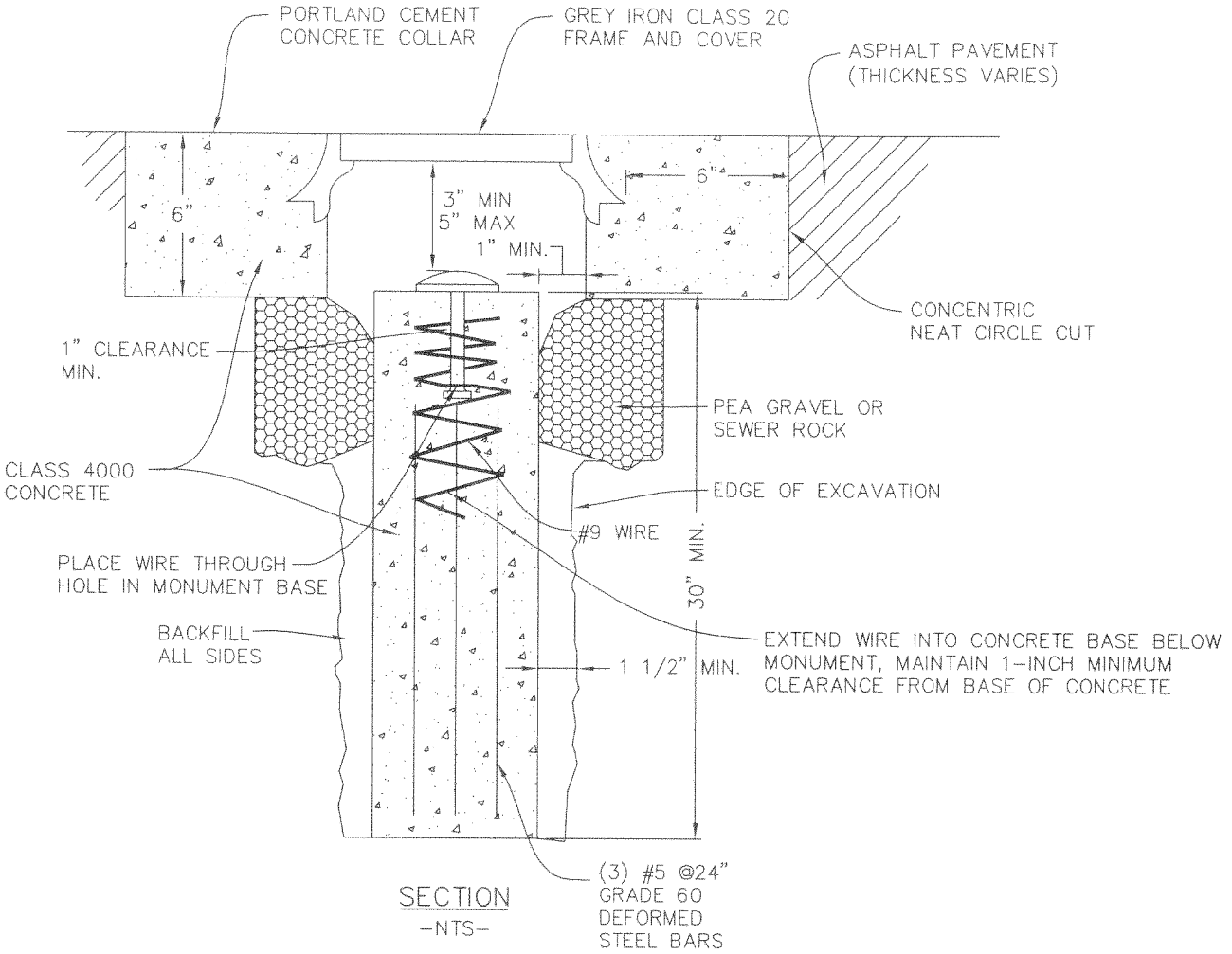

SECTION
-NTS-

NOTE: A MINIMUM OF TWO (2) SUBDIVISION MONUMENTS ARE REQUIRED ON EACH SUBDIVISION PLAT. THE LINE OF SIGHT BETWEEN EACH SUBDIVISION MONUMENT SHALL NOT BE OBSTRUCTED WITH PROPOSED BUILDINGS OR BUILDING ENVELOPES.

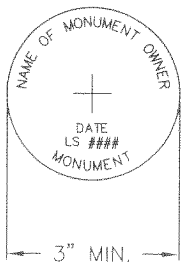

CAP PLAN
-NTS-

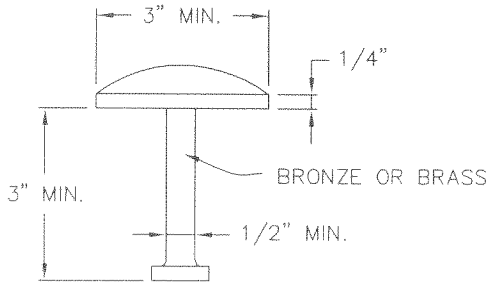

CAP SECTION
-NTS-

DRAWN: JRP	Northern ENGINEERING-LAND PLANNING -CONSTRUCTION MANAGEMENT 1040 E. 800 N. OREM, UTAH 84057 (801) 802-8992	AMERICAN FORK CITY	STANDARD DETAIL FOR TYPE "A" MONUMENT CAP AND BASE	DRAWING NO. 15.28
REVISED:				
DATE: MAY 2002				
SCALE: VARIES				

K:\AMERICAN FORK STANDARDS\Drawings\FINAL\MONUMENT.dwg 05/12/2005 11:01:17 AM MDT

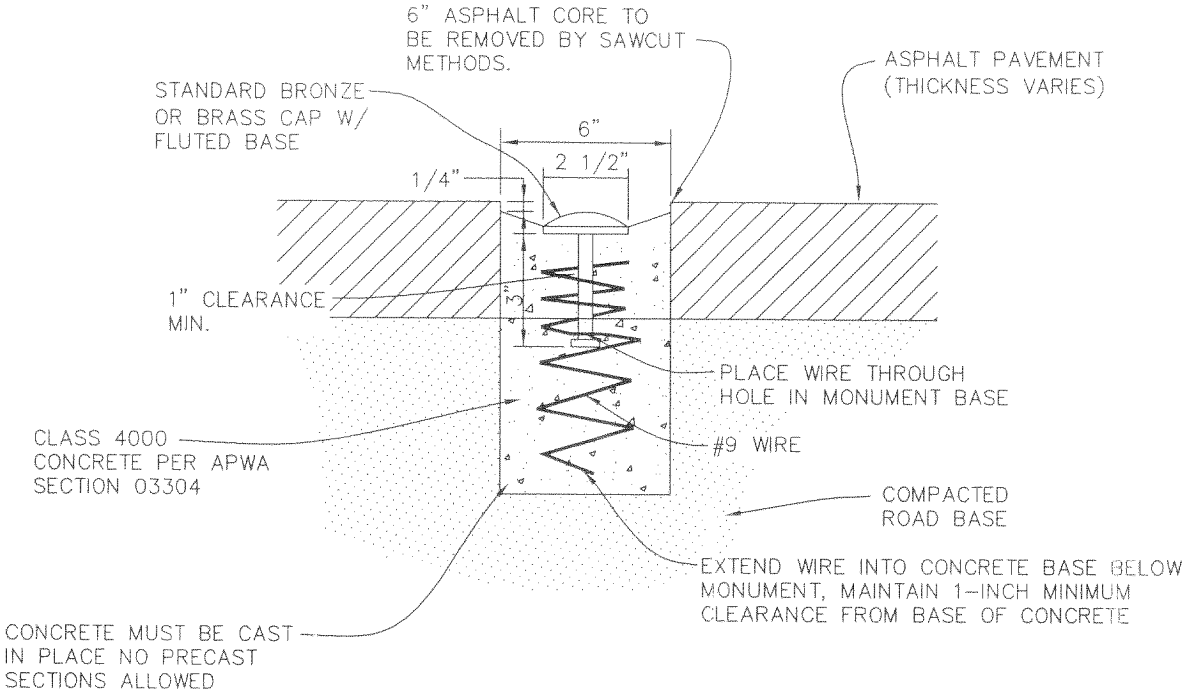

SECTION
-NTS-

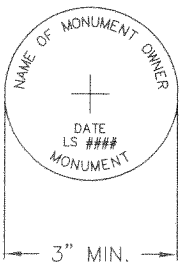

CAP PLAN
-NTS-

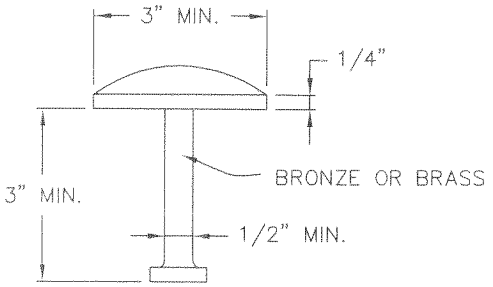

CAP SECTION
-NTS-

NOTE:
1) A MINIMUM OF TWO (2) SUBDIVISION MONUMENTS ARE REQUIRED ON EACH SUBDIVISION PLAT. THE LINE OF SIGHT BETWEEN EACH SUBDIVISION MONUMENT SHALL NOT BE OBSTRUCTED WITH PROPOSED BUILDINGS OR BUILDING ENVELOPES.

2) ALL TYPE "B" STREET MONUMENTS ARE TO BE APPROVED BY AMERICAN FORK CITY PUBLIC WORKS DEPARTMENT.

DRAWN: JRP REVISED: DATE: MAY 2002 SCALE: VARIES	Northern ENGINEERING-LAND PLANNING-CONSTRUCTION MANAGEMENT 1040 E. 800 N. OREM, UTAH 84057 (801) 802-8992	AMERICAN FORK CITY	STANDARD DETAIL FOR TYPE "B" STREET MONUMENT	DRAWING NO. 15.29

K:\AMERICAN FORK STANDARDS\Drawings\FINAL\MONUMENT-B.dwg 05/12/2005 11:02:20 AM MDT

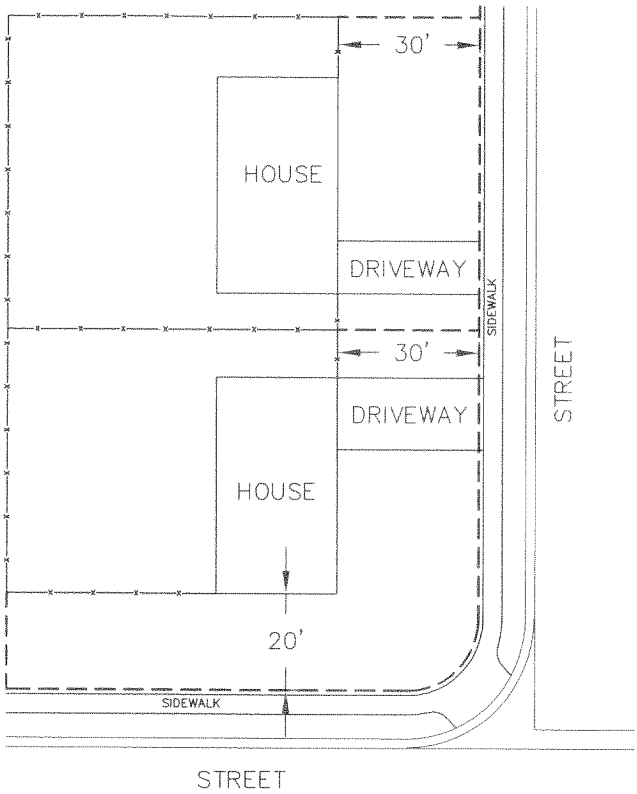

American Fork City Fence Ordinance
2.5.15 Fences, Walls and Hedges

No fence, wall hedge or similar device extending into or enclosing all or any part of the front yard or side yard adjacent to a street shall be constructed or maintained at a height greater than forty-two (42) inches; provided that where the fence fabric is to be of the chain link or other open mesh type, and the fence will remain non-sight obstructing, the maximum height may be increased to not greater than forty-eight (48) inches. The maximum height of any fence, hedge, wall, or similar enclosing device situated within any other portion of a lot shall be six (6) feet.

All fences and walls shall be constructed of substantial material and the design and construction shall be consistent with the quality of dwellings and other improvements within the surrounding area. It shall be unlawful for any person to erect or cause to be erected or to maintain any barbed wire fence along or adjacent to any public street within the city.

Before commencing construction, plans for all fences and walls shall first be submitted to and approved by the Zoning Administrator. Where, in the opinion of the Administrator, a proposed fence or wall does not conform to the above criteria, he shall refer the application to the Planning Commission for action. Any applicant aggrieved by a decision may appeal said decision to the Planning Commission who shall have the authority to reverse, affirm, or modify any decision of the Administrator.

If you have any questions concerning the Fence Ordinance, please contact the Building Department at 275 East 200 North or call 763-3065.

Note: A 30" clearance must be maintained around fire hydrants.

— — — — 42" SOLID OR 48" OPEN (50% OR GREATER) MAXIMUM HEIGHT

—x—x— 6 FOOT MAXIMUM HEIGHT

NOTE:

THE PROPERTY LINE IS 1 FOOT INSIDE THE SIDEWALK.

DRAWN: JRP	Northern ENGINEERING-LAND PLANNING -CONSTRUCTION MANAGEMENT 1040 E. 800 N. OREM, UTAH 84057 (801) 802-8992	AMERICAN FORK CITY	STANDARD DETAIL FOR FENCING ORDINANCE	DRAWING NO. 15.30
REVISED:				
DATE: MAY 2002				
SCALE: VARIES				

K:\AMERICAN FORK STANDARDS\Drawings\FINAL\FENCING.dwg 05/12/2005 10:54:46 AM MDT

NOTES:

1. COORDINATE W/ AMERICAN FORK CITY ON LOCATION OF IRR. BOX.
2. ALL COMPRESSION FITTINGS SHALL INCLUDE A MUELLER 2"CTS PE LINER PART NO. 506141

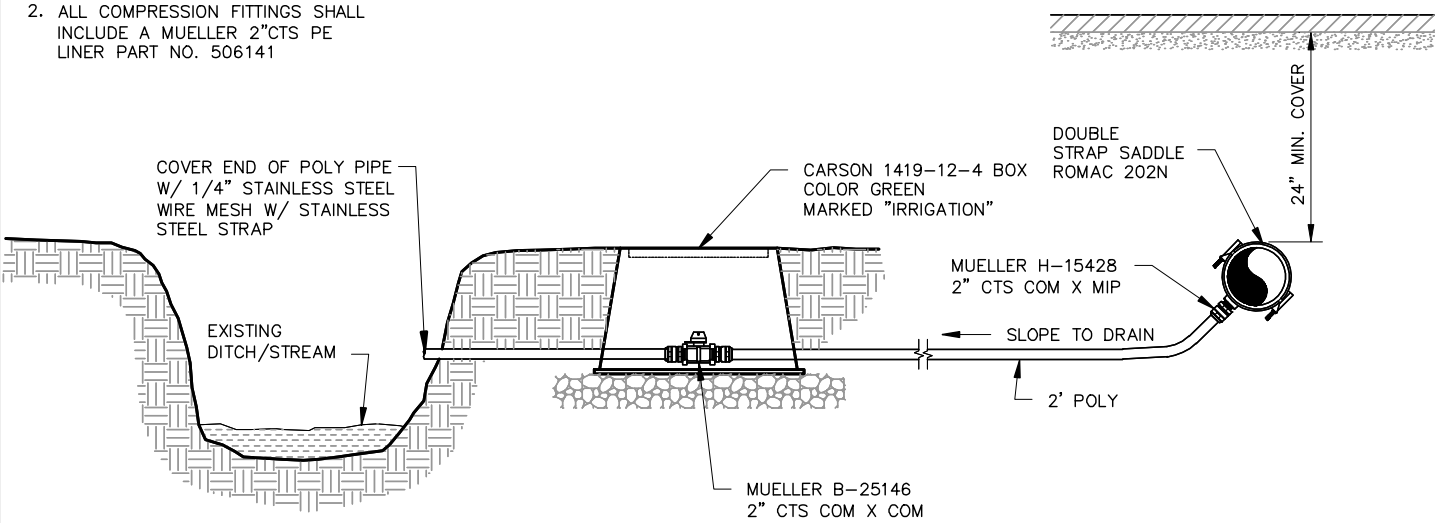

2" DRAIN TO DAYLIGHT

NOTES:

1. PROPOSED DRAIN LINE CAN TIE INTO CATCH BASIN BOX (SHOWN) OR SUMP MANHOLE (NOT SHOWN), OR BOX CULVERT (NOT SHOWN)
2. ALL COMPRESSION FITTINGS SHALL INCLUDE A MUELLER 2"CTS PE LINER PART NO. 506141

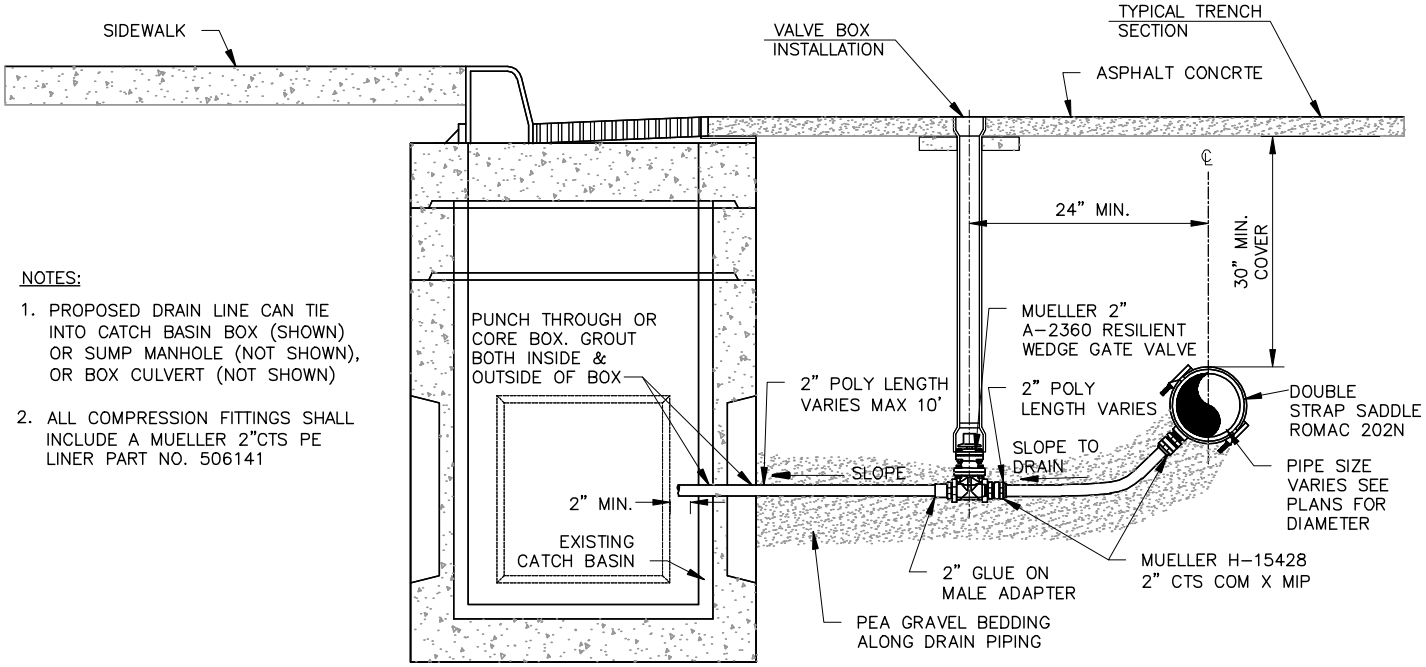

2" DRAIN TO CATCH BASIN/SUMP/BOX CULVERT

DRAWN:	HORROCKS ENGINEERS ONE WEST MAIN P.O. BOX 377 AMERICAN FORK (801) 763-5100	AMERICAN FORK CITY	STANDARD DETAIL FOR SECONDARY WATER DETAILS	DRAWING NO. 15.31
REVISED: 11/2010				
DATE:				
SCALE:				

O:\Client\118 American Fork General\Irrigation Standards\2010 Update\ AF STD 15.31.dwg 11/18/10 11:12 skVerss

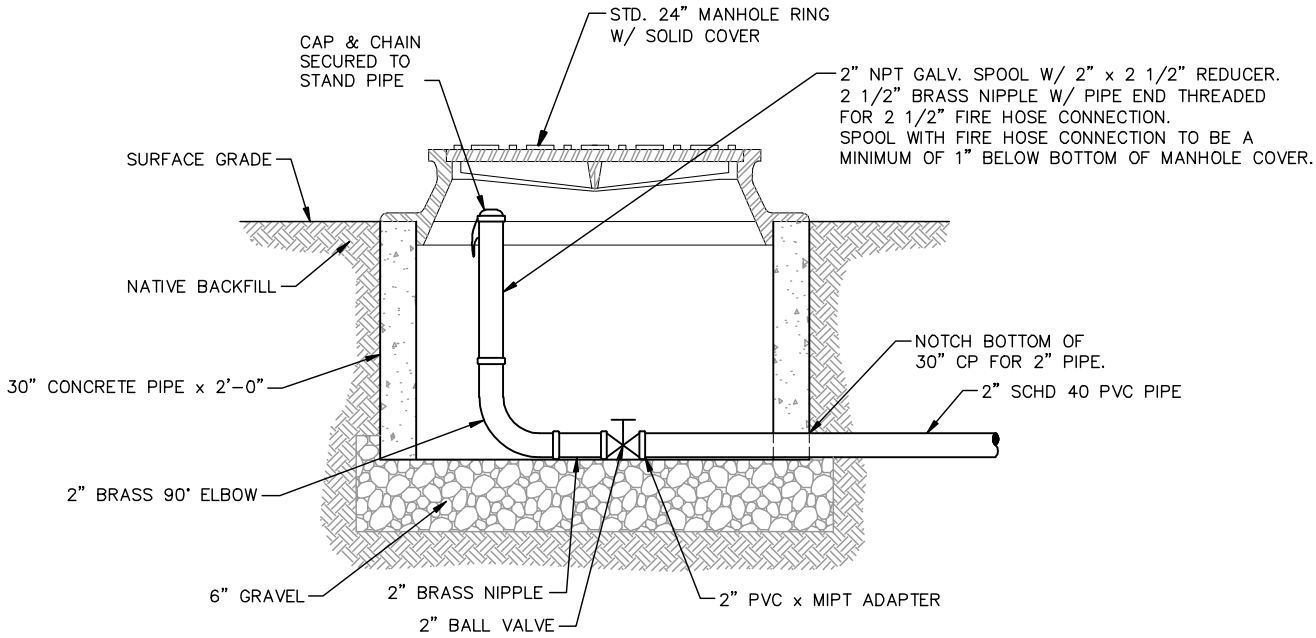

STANDARD SECTION WHERE NO STREET IMPROVEMENTS EXIST

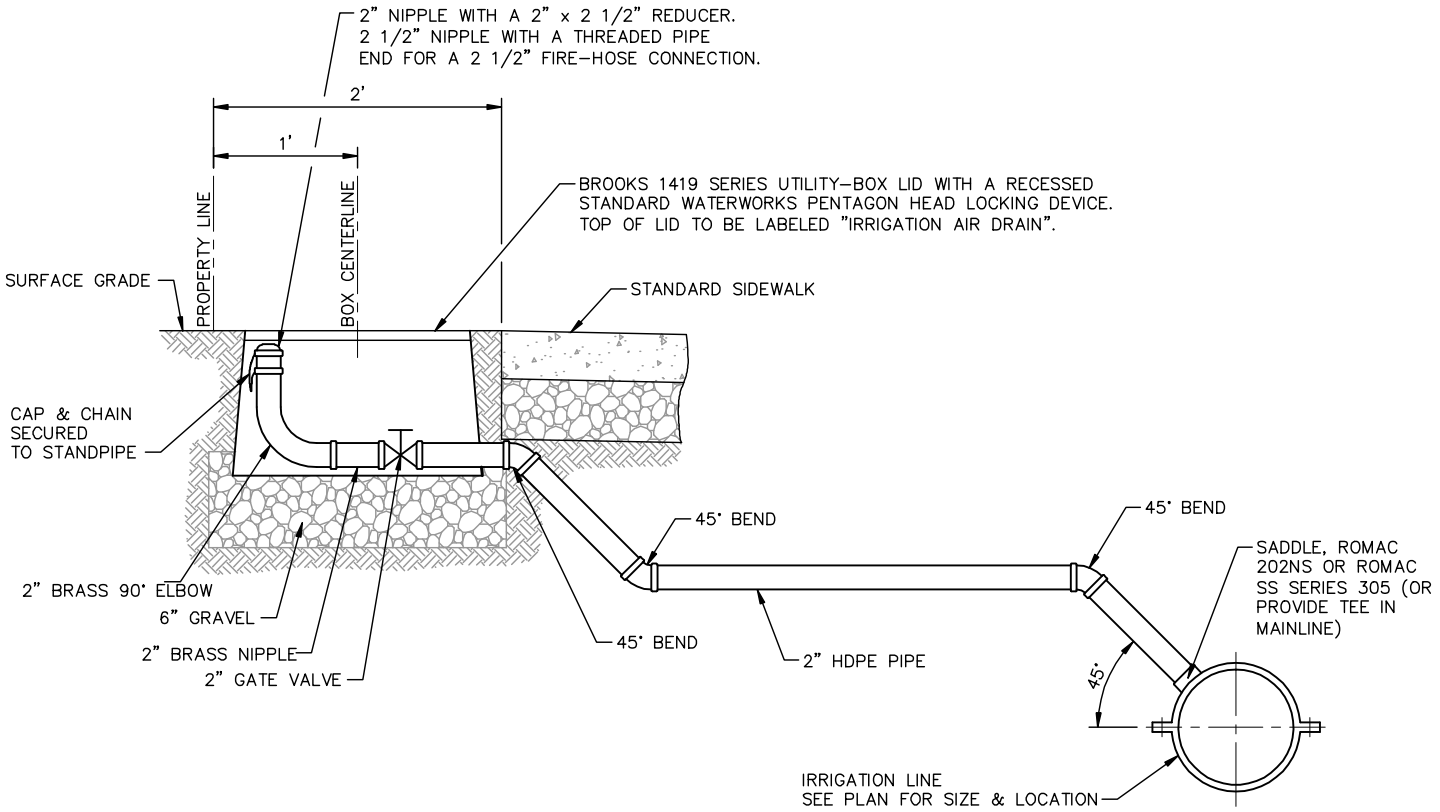

STANDARD SECTION WHERE STREET IMPROVEMENTS EXIST

DRAWN:	HORROCKS ENGINEERS — ONE WEST MAIN, P.O. BOX 377, AMERICAN FORK, (801) 763-5100	AMERICAN FORK CITY	STANDARD DETAIL FOR: AIR INLET & REMOVAL FACILITY FOR SECONDARY WATER	DRAWING NO. 15.32
REVISED: 11/2010				
DATE:				
SCALE:				

O:\Client\118 American Fork General\Irrigation Standards\2010 Update\ AF STD 15.32.dwg 11/18/10 11:13 skylers

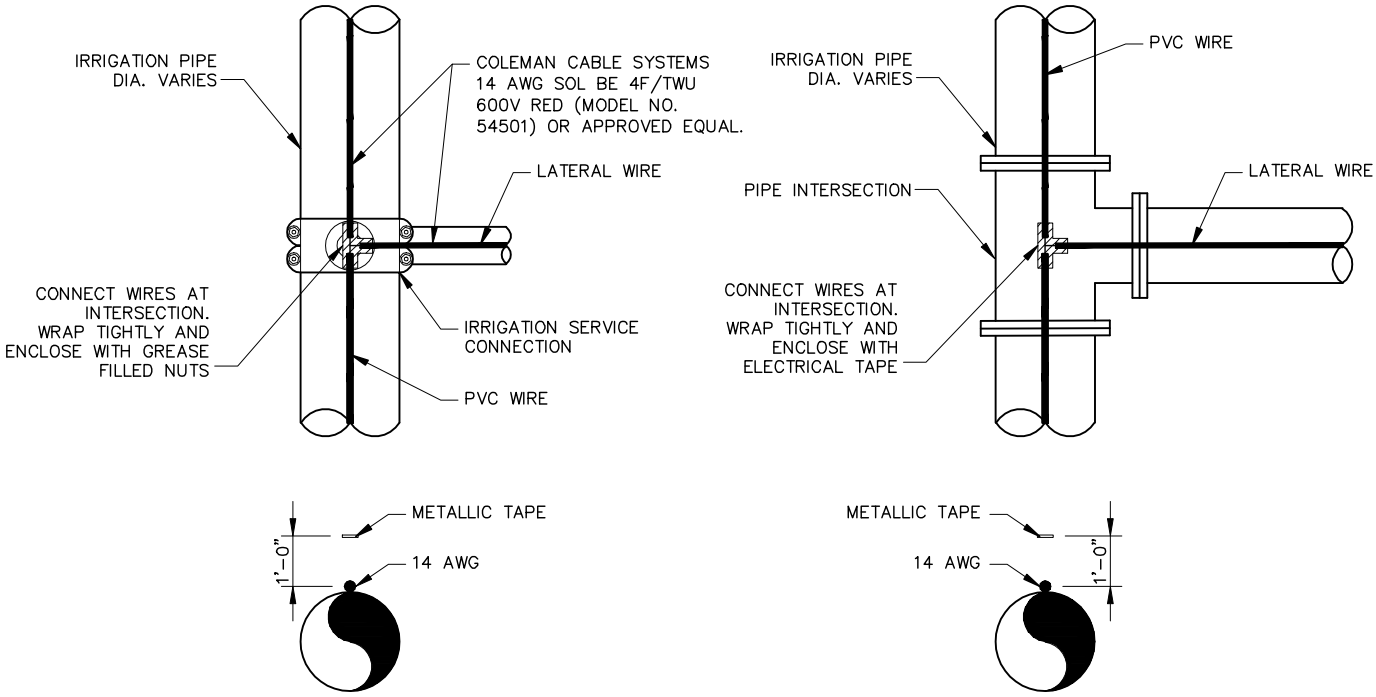

14 AWG LOCATOR WIRE

NTS

NOTES:

1. STRIP MAIN WIRE 2" @ LATERAL/SERVICE INTERSECTION. STRIP LATERAL WIRE 3". WRAP LATERAL WIRE TIGHTLY AROUND STRIPPED MAIN WIRE. USE ELECTRICAL TAPE TO WRAP AND COVER ALL BARE WIRES.
2. THIS DETAIL IS TYPICAL OF ALL PIPE INTERSECTIONS AND IRRIGATION SERVICE CONNECTIONS.
3. LOCATOR WIRE SHALL BE PLACED PARALLEL W/ ALL PVC PIPING DIRECTLY ABOVE PIPE.
4. FOR DUCTILE IRON PIPE AT PVC & DIP INTERSECTIONS AND AT IRRIGATION SERVICE CONNECTIONS, WRAP LOCATOR WIRE AROUND DIP AT LEAST TWICE.

DRAWN:	HORROCKS ENGINEERS — ONE WEST MAIN, P.O. BOX 377, AMERICAN FORK, (801) 763-5100	AMERICAN FORK CITY	STANDARD DETAIL FOR: LOCATOR WIRE DETAIL
REVISED: 11/2010			DRAWING NO. 15.33
DATE:			
SCALE:			

O:\Client\118 American Fork General\Irrigation Standards\2010 Update\ AF STD 15.33.dwg 11/18/10 11:13 skylers

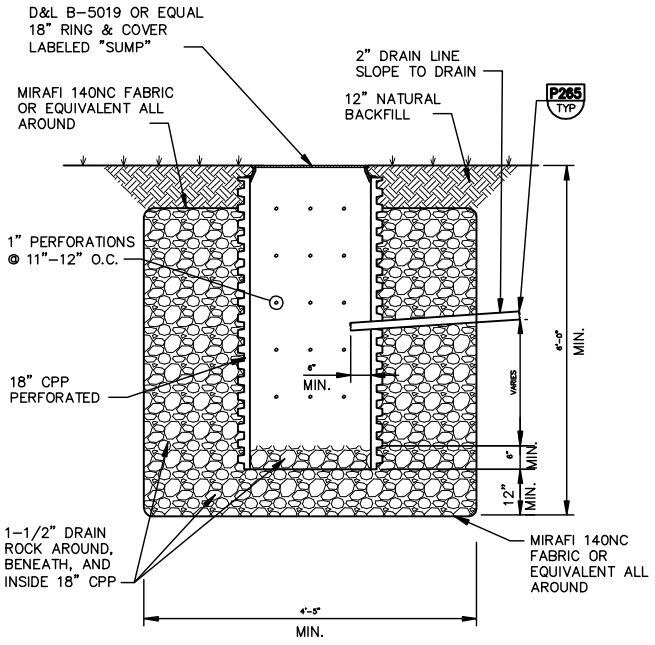

P320 TYP SMALL SUMP

N.T.S.

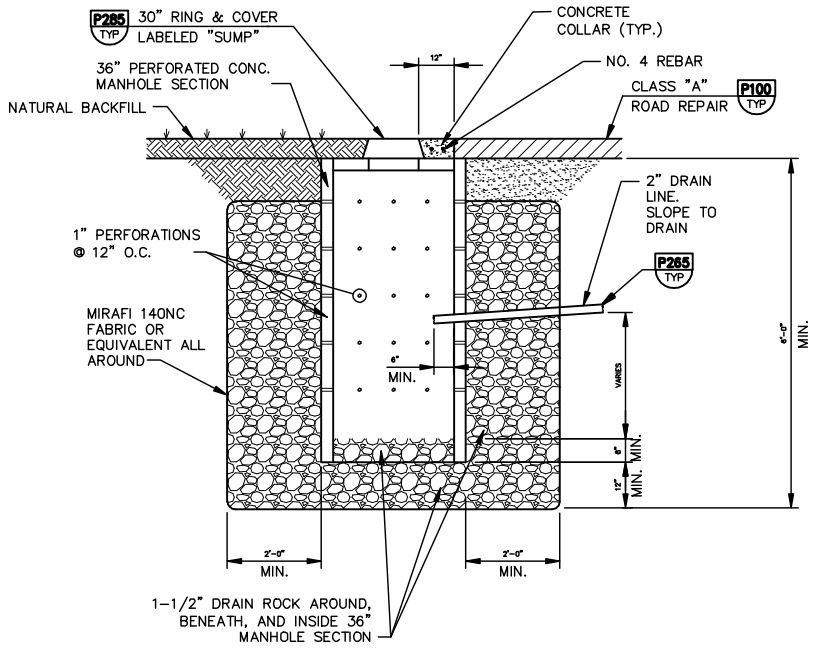

P321 TYP LARGE SUMP

N.T.S.

O:\Client\118 American Fork General\Irrigation Standards\2010 Update\ AF STD 15.34.dwg 11/18/10 11:14 skylerss

DRAWN:	HORROCKS ENGINEERS ONE WEST MAIN P.O. BOX 377 AMERICAN FORK (801) 763-5100	AMERICAN FORK CITY	STANDARD DETAIL FOR SUMP DETAILS	DRAWING NO. 15.34
REVISED: 11/2010				
DATE:				
SCALE:				

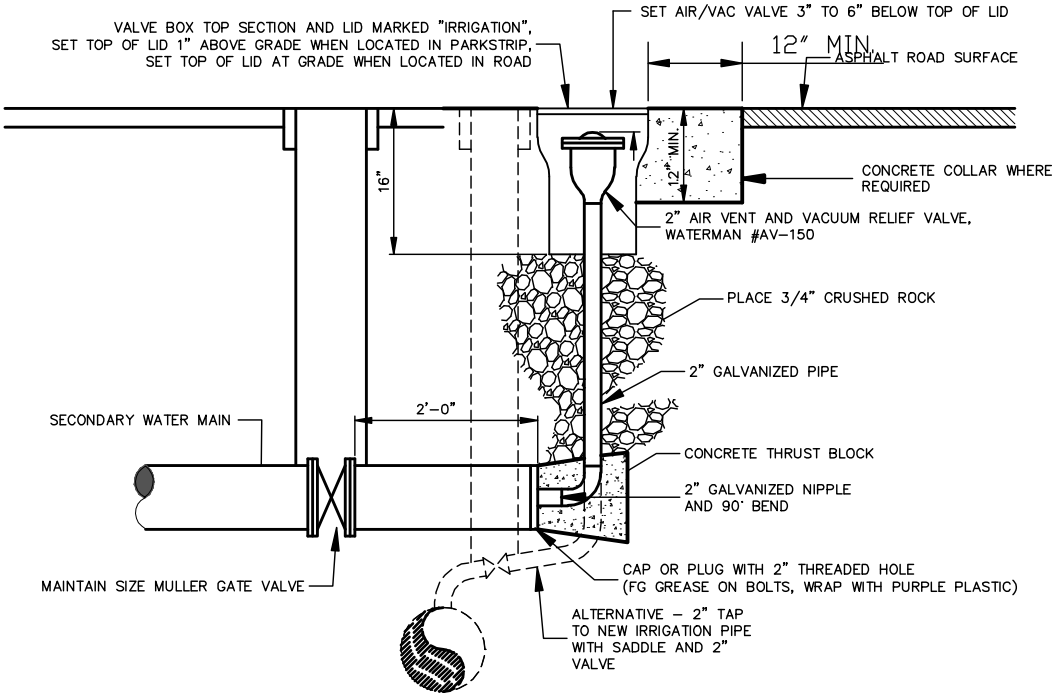

P297 TYP

AIR RELEASE STATION

N.T.S.

DRAWN:	HORROCKS ENGINEERS — ONE WEST MAIN, P.O. BOX 377, AMERICAN FORK, (801) 763-5100	*AMERICAN FORK CITY*	STANDARD DETAIL FOR: AIR RELEASE STATION DETAIL	DRAWING NO. 15.35
REVISED: 11/2010				
DATE:				
SCALE:				

O:\Client\118 American Fork General\Irrigation Standards\2010 Update\ AF STD 15.35.dwg 11/18/10 11:14 skylerss

MINIMUM STANDARDS FOR

GATE-CONTROLLED DRIVEWAY ACCESS

THREE-POINT TURN REQUIRED DESIGN VEHICLE

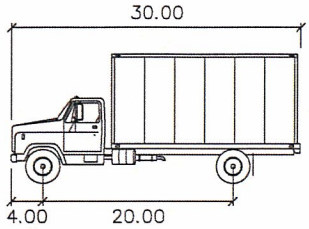

SU	feet
Width	: 8.00
Track	: 8.00
Lock to Lock Time	: 6.00
Steering Angle	: 31.8

THREE-POINT TURN REQUIRED DESIGN MOVEMENT

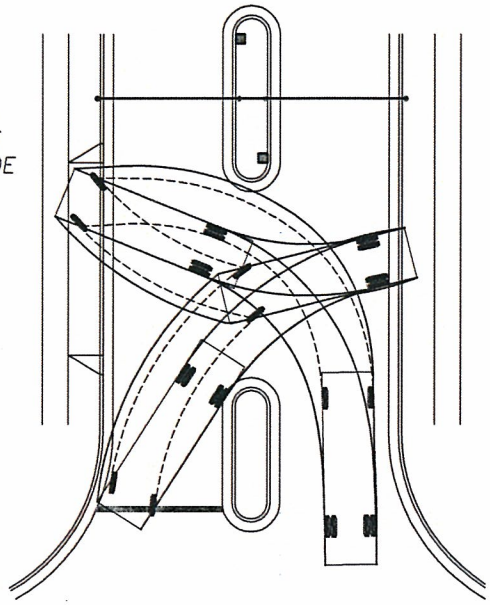

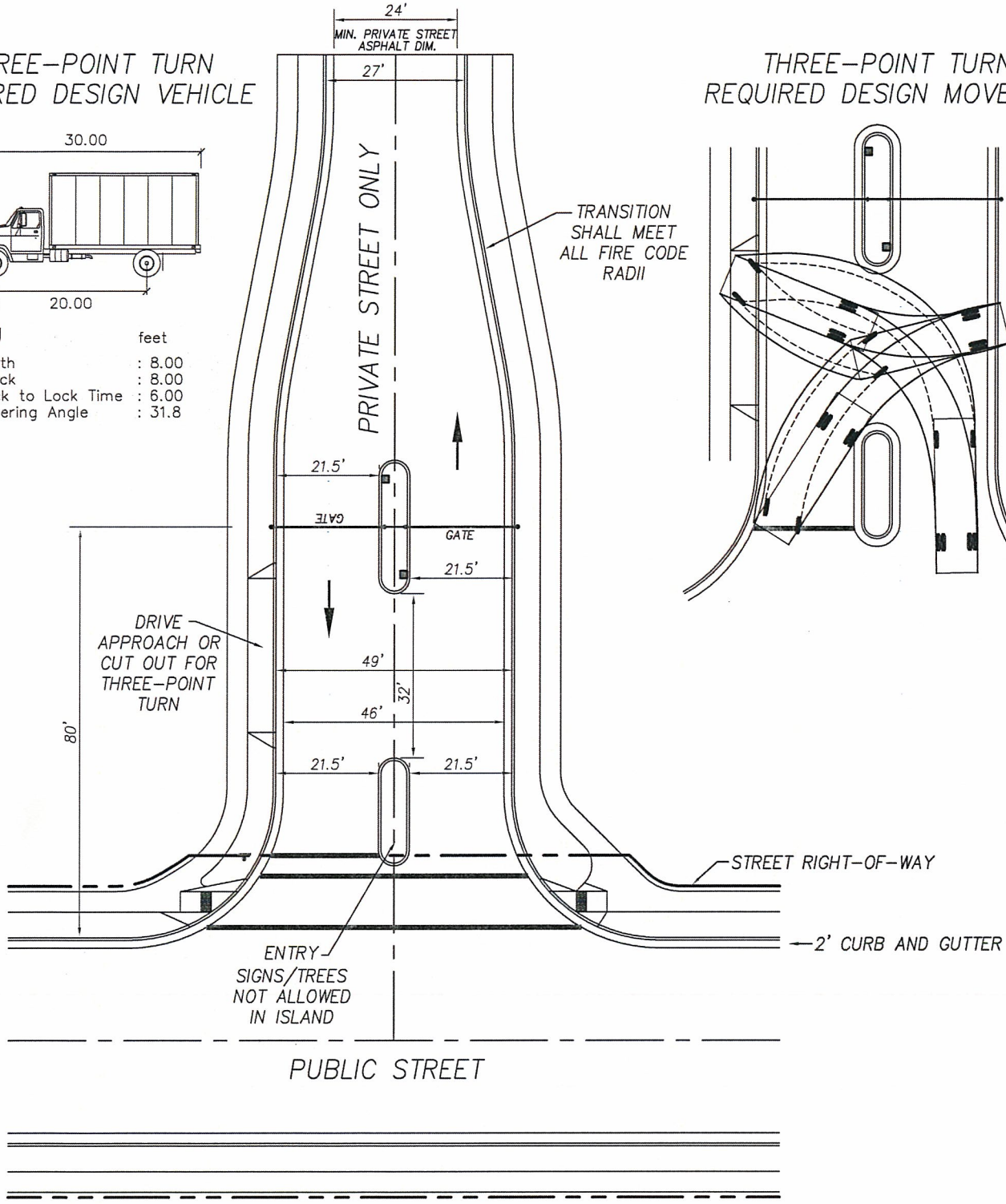

NOTES:

1. IN EVENT OF CHANGES IN THE INTERNATIONAL FIRE CODE, DIMENSIONS AND DETAIL SHALL BE UPDATED TO MATCH REQUIRED FIRE CODE MINIMUM DIMENSIONS.
2. DIMENSIONS SHOWN ARE MINIMUMS ONLY, ACTUAL ENTRY DIMENSIONS MAY VARY FROM THOSE SHOWN.
3. FIRE MARSHALL APPROVAL REQUIRED FOR ALL GATE EMERGENCY ACCESS PROVISIONS. KNOX BOX REQUIRED AS MINIMUM EMERGENCY ACCESS PROVISION.
4. STANDARD CITY SIGHT TRIANGLE REQUIREMENTS APPLY TO ALL CORNERS AT INTERSECTION.
5. PEDESTRIAN GATES REQUIRED ON BOTH SIDEWALKS. GATES SHALL EXIT PROPERTY WITHOUT RESTRICTION.

FILE: \Q:\LD-PROJECT\AF-CITY-STANDARDS\DWG\GATED-ENTRY.DWG
DATE: NOVEMBER 16, 2010

STD. DWG. #15.38A

AMERICAN FORK
1853

MINIMUM STANDARDS FOR
PRIVATE ROADWAYS

24' ASPHALT STREET – NO ON-STREET PARKING

THIS DETAIL ONLY APPLIES TO STREETS WITHOUT A FIRE HYDRANT AND WITH STRUCTURES WHICH ARE LESS THAN 30-FEET IN HEIGHT

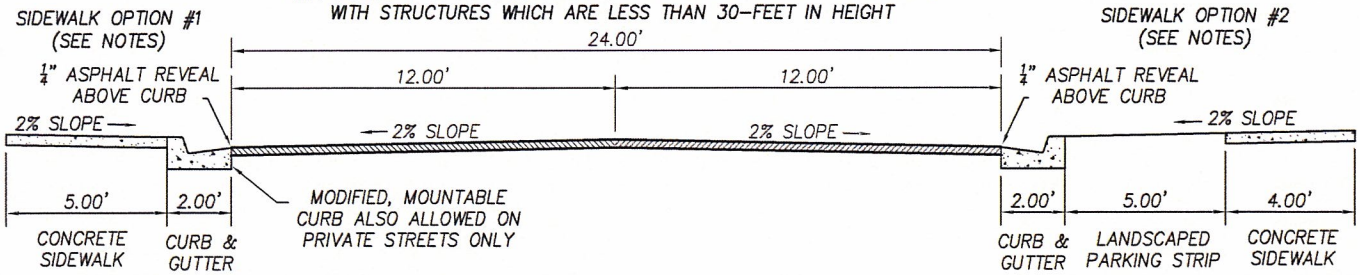

26' ASPHALT STREET – NO ON-STREET PARKING

THIS DETAIL ONLY APPLIES TO STREETS WITH EITHER A FIRE HYDRANT OR STRUCTURES WHICH ARE GREATER THAN 30-FEET IN HEIGHT

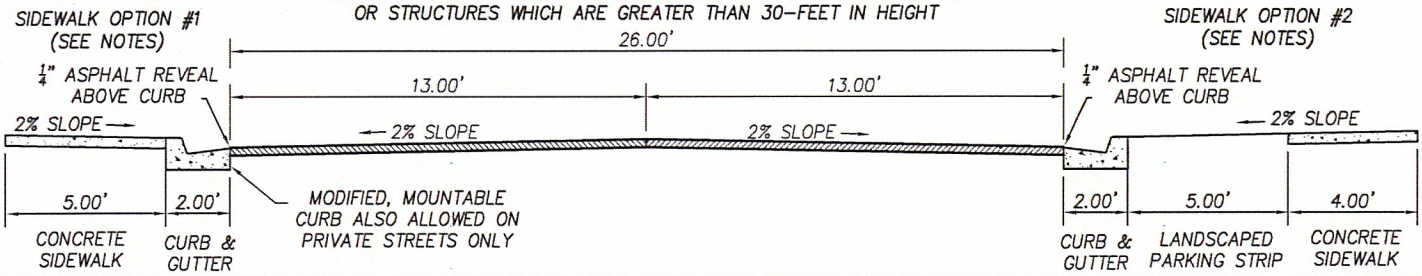

32' ASPHALT STREET – ONE SIDE ON-STREET PARKING

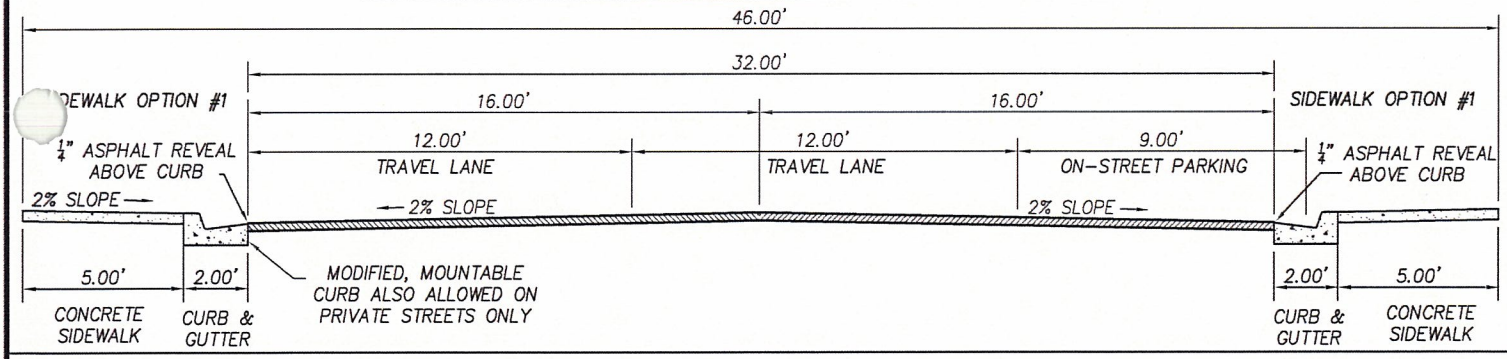

PRIVATE STREET CROSS-SECTION NOTES:

1. FOR THE PURPOSE OF APPLICATION TO THE INTERNATIONAL FIRE CODE APPENDICES, AMERICAN FORK CITY DEFINES THE ROADWAY AS THE ALL-WEATHER PAVED (ASPHALT OR CONCRETE) DRIVING SURFACE ONLY. THE GUTTER PORTION OF THE ROADWAY IS DEFINED AS A DRAINAGE FEATURE.
2. WHERE UNITS OCCUR ON BOTH SIDES OF THE STREET, SIDEWALK IS REQUIRED ON BOTH SIDES OF A PRIVATE STREET. EACH UNIT SERVED OR ACCESSED FROM A PRIVATE STREET MUST HAVE A PEDESTRIAN ACCESS WHICH COMPLIES WITH THE AMERICANS WITH DISABILITIES ACT (A.D.A.) TO THE PRIVATE UNIT BOUNDARY (OR LIMITED COMMON BOUNDARY WHERE INDIVIDUAL UNIT SIDEWALK IS DESIGNATED ON THE PLAT AS LIMITED COMMON OWNERSHIP) FROM THE PUBLIC PEDESTRIAN TRAVEL WAY. SIDEWALK MAY BE CONSTRUCTED PER EITHER OF THE TWO OPTIONS SHOWN.
3. THE 4-FOOT SIDEWALK SHOWN IN SIDEWALK OPTION #2 MAY ALSO MEANDER ALONG THE STREET CORRIDOR MAINTAINING A MINIMUM OF 3-FEET CLEARANCE FROM CURB PROVIDED THE ALIGNMENT USES A LARGE CURVE RADIUS (APPROXIMATELY 150-FOOT RADIUS).
4. SIDEWALK AND CURB AND GUTTER AND ASSOCIATED APPURTENANCES TO BE CONSTRUCTED PER AMERICAN FORK CITY STANDARDS.
5. PRIVATE STREETS SHALL BE POSTED WITH FIRE LANE AND OR NO PARKING DESIGNATIONS AS PER CITY ADOPTED INTERNATIONAL FIRE CODE REQUIREMENTS.
6. ANY STANDARD SHOWN HEREON THAT IS IN CONFLICT WITH A MORE STRINGENT STANDARD IN ADDITIONAL CITY BUILDING CODES AND STANDARDS SHALL BE CONSTRUCTED TO THE MORE STRINGENT STANDARD.
7. THE COMBINATION CURB, GUTTER, SIDEWALK SECTION SHOWN IN SIDEWALK OPTION #1 MAY BE REDUCED TO A A 4-FOOT SIDEWALK ONLY WHEN THE FOLLOWING CONDITIONS EXIST: NO PARKING IS ALLOWED ALONG THE STREET, NO DRIVEWAYS ACCESS ACROSS THE 4-FOOT DRIVEWAY SYSTEM.
8. SIDEWALK OPTION # SHALL HAVE AN A.D.A. PASSING ZONE EVERY 200-FEET ALONG SIDEWALK OR SIDEWALK SHALL BE INCREASED TO 5-FOOT WIDTH.
9. ALL PRIVATE STREETS SHALL BE DESIGNED IN ACCORDANCE WITH AMERICAN FORK CITY PUBLIC SAFTETY DEPARTMENTS (POLICE/FIRE) REQUIREMENTS.
10. PRIVATE STREETS SHALL PROVIDE PEDESTRIAN SAFETY FEATURES SUCH AS CROSSWALKS AND OTHER ENHANCEMENTS AS DEEMED APPROPRIATE BY THE LAND USE AUTHORITY.

COMBINATION CURB, GUTTER, SIDEWALK: DRIVEWAY DETAIL

STD. DWG. #15.39A

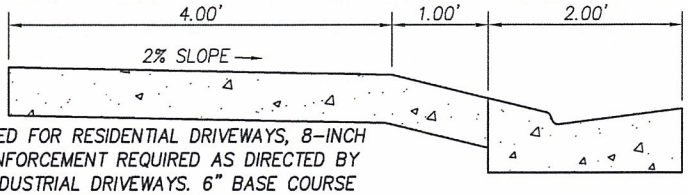

NOTES:

1. 6" CONCRETE THICKNESS REQUIRED FOR RESIDENTIAL DRIVEWAYS, 8-INCH FOR COMMERCIAL/INDUSTRIAL. REINFORCEMENT REQUIRED AS DIRECTED BY CITY ENGINEER FOR COMMERCIAL/INDUSTRIAL DRIVEWAYS. 6" BASE COURSE REQUIRED. 12-INCH SUB-BASE IN SENSITIVE LANDS AREA.
2. SIDEWALK AND CURB AND GUTTER AND ASSOCIATED APPURTENANCES TO BE CONSTRUCTED PER AMERICAN FORK CITY STANDARDS.

FILE: \T:\LD-PROJECT\AF-CITY-STANDARDS \DWG\PRIVATE-STREET.DWG
DATE: NOVEMBER 16, 2010

AMERICAN FORK
1853

MINIMUM STANDARDS FOR

NEIGHBORHOOD TRAIL

LIMITED RIGHT-OF-WAY TRAIL - RETROFIT PROJECT

EXHIBIT 'A'

NOTE: CONSTRUCTED TRAIL IS CITY PREFERRED OPTION, SIDEWALK/BIKE LANE OPTION ALLOWED/INTENDED AS INTERIM MEASURE.

SIDEWALK/BIKE LANE OPTION

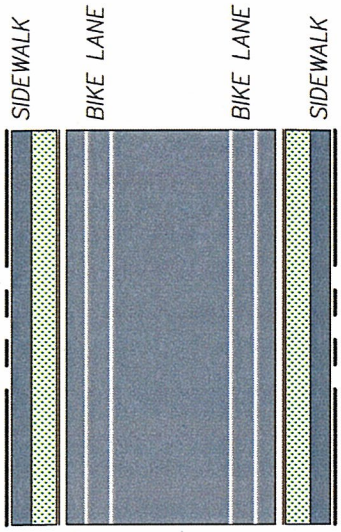

CONSTRUCTED TRAIL

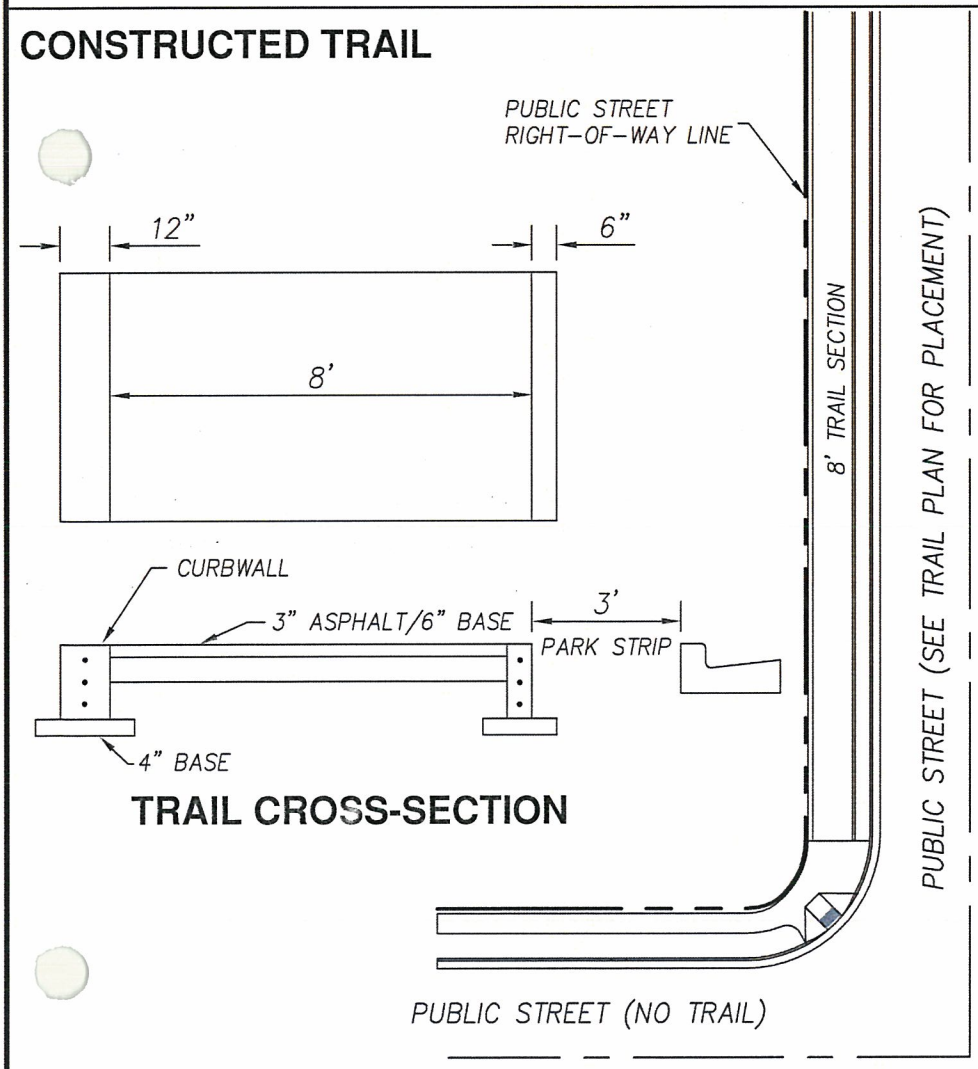

STD. DWG. #15.40A

AMERICAN FORK
1853

FILE: T:\LD-PROJECT\AF-CITY-STANDARDS\DWG\LIMITED-SPACE-TRAIL.DWG
DATE: NOVEMBER 16, 2010

MINIMUM STANDARDS FOR

NEIGHBORHOOD TRAIL

MEANDERING TRAIL ALONG ROADSIDE

NEW CONSTRUCTION

EXHIBIT 'B'

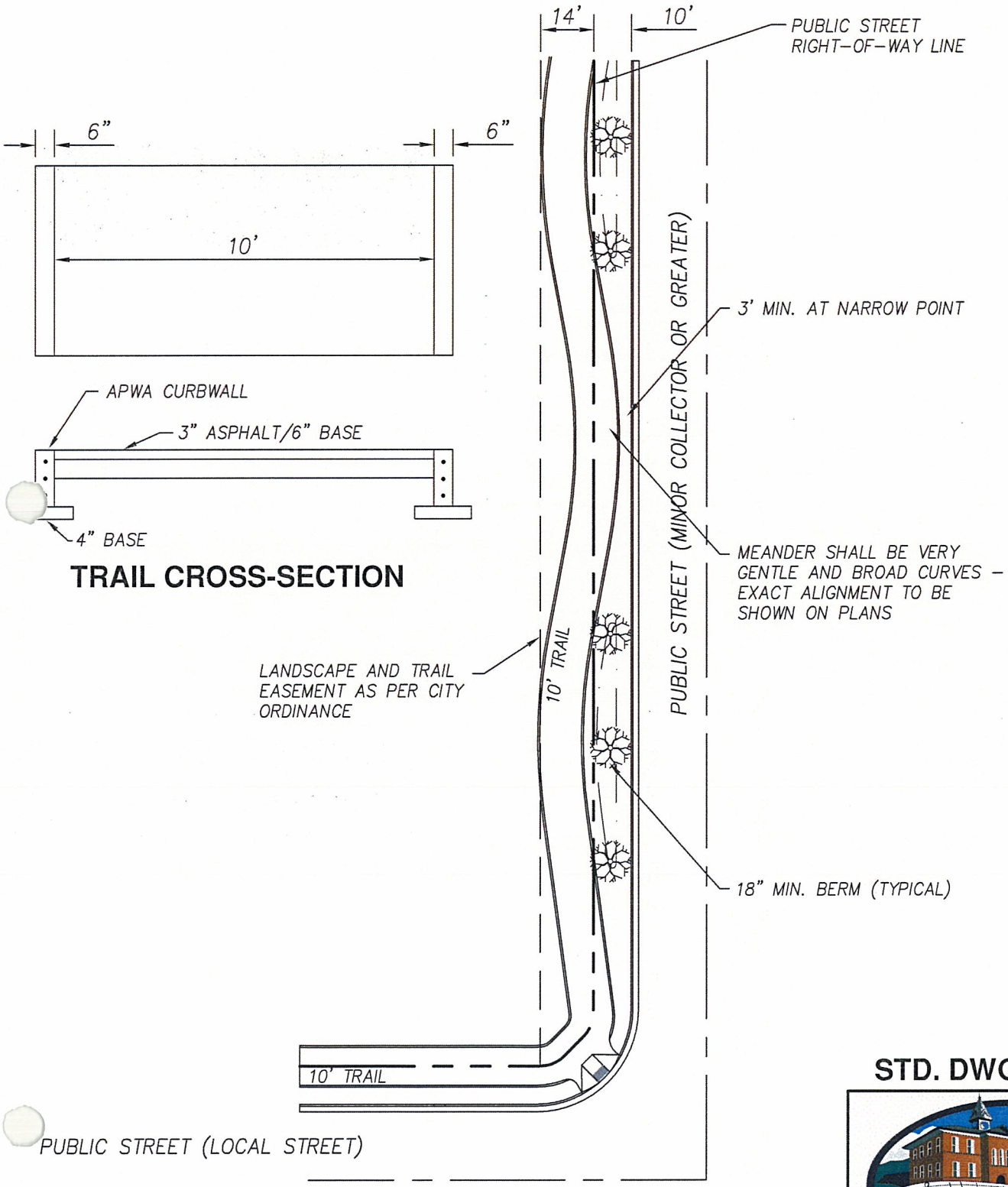

STD. DWG. #15.40B

AMERICAN FORK
— 1853 —

FILE: T:\LD-PROJECT\AF-CITY-STANDARDS\DWG\MEANDERING-TRAIL.DWG
DATE: NOVEMBER 16, 2010

MINIMUM STANDARDS FOR

REGIONAL & NEIGHBORHOOD TRAIL (ALONG WATER COURSE)

EXHIBIT 'C'

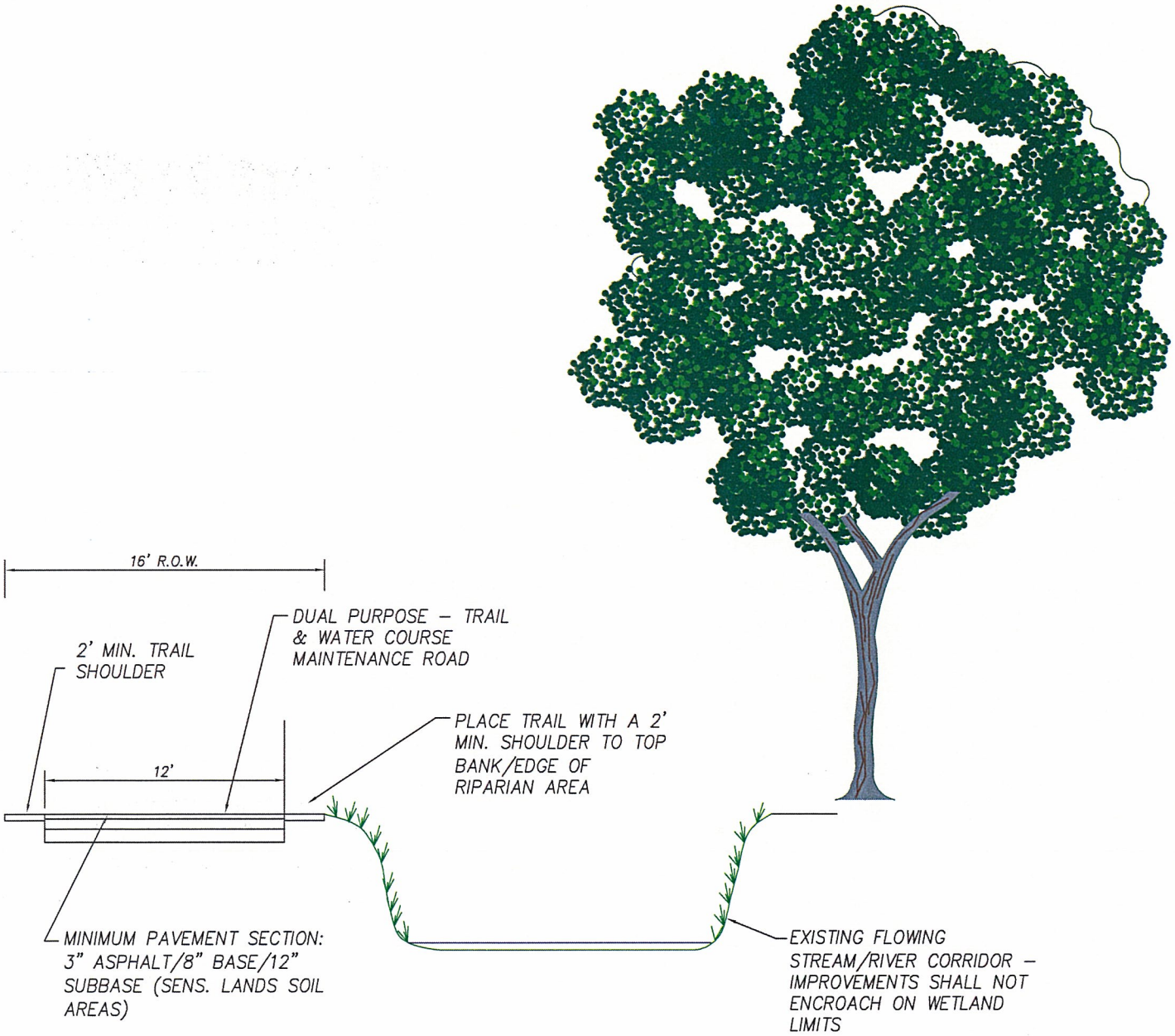

TRAIL CROSS-SECTION

STD. DWG. #15.40C

E:
TRAIL DETAIL SHALL APPLY AS APPLICABLE TO ANY LOCATION SO DESIGNATED ON AMERICAN FORK CITY TRAILS MAP. SPECIFIC NOTED LOCATIONS ARE ALONG AMERICAN FORK RIVER AND SPRING CREEK WATER COURSES.

FILE: T:\LD-PROJECT\AF-CITY-STANDARDS\DWG\RIVER-TRAIL.DWG
DATE: NOVEMBER 16, 2010

AMERICAN FORK
— 1853 —

MINIMUM STANDARDS FOR

NEIGHBORHOOD TRAIL

RURAL-LANDSCAPED TRAIL - ROADSIDE

NEW CONSTRUCTION

EXHIBIT D'

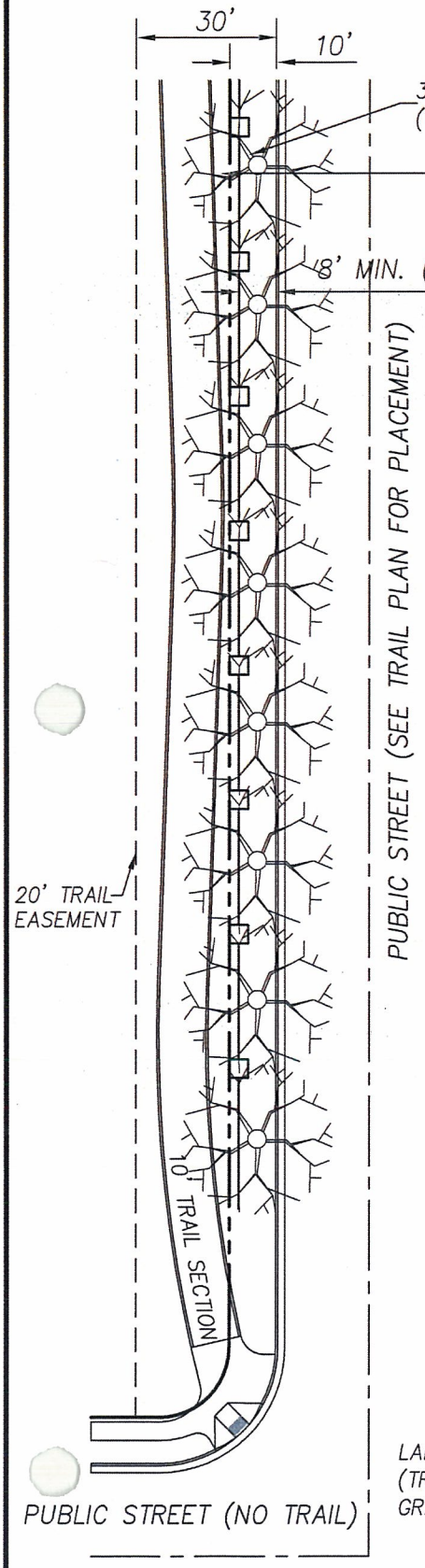

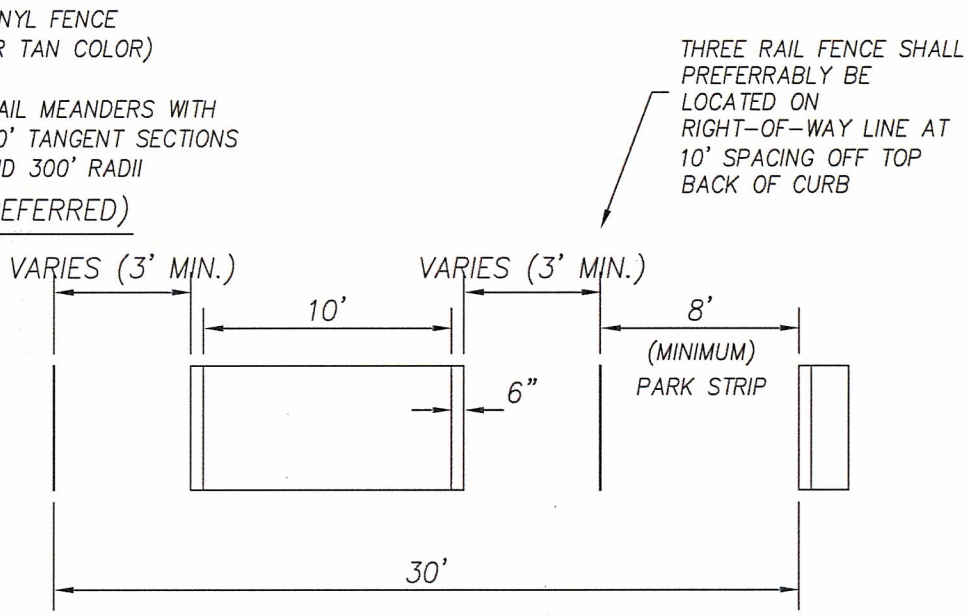

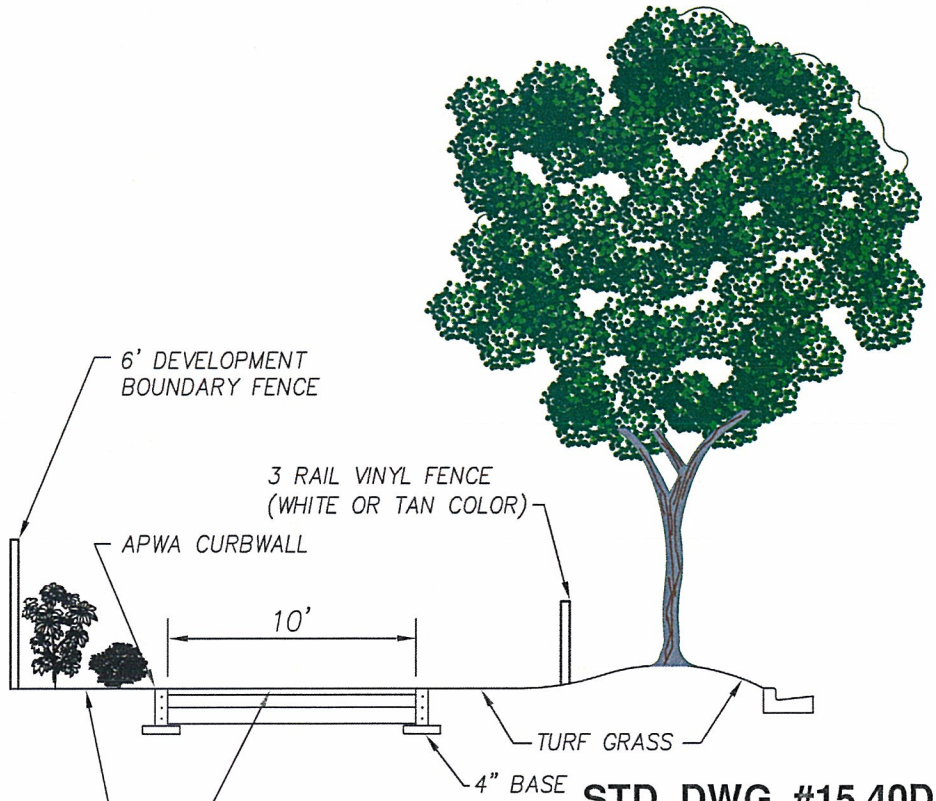

STD. DWG. #15.40D

TRAIL CROSS-SECTION

AMERICAN FORK
— 1853 —

FILE: T:\LD-PROJECT\AF-CITY-STANDARDS\DWG\RURAL-TRAIL.DWG
DATE: NOVEMBER 16, 2010

MINIMUM STANDARDS FOR

SLOUGH TRAIL

EXHIBIT 'E'

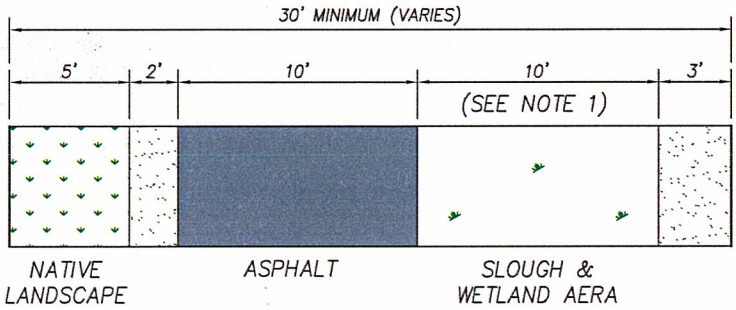

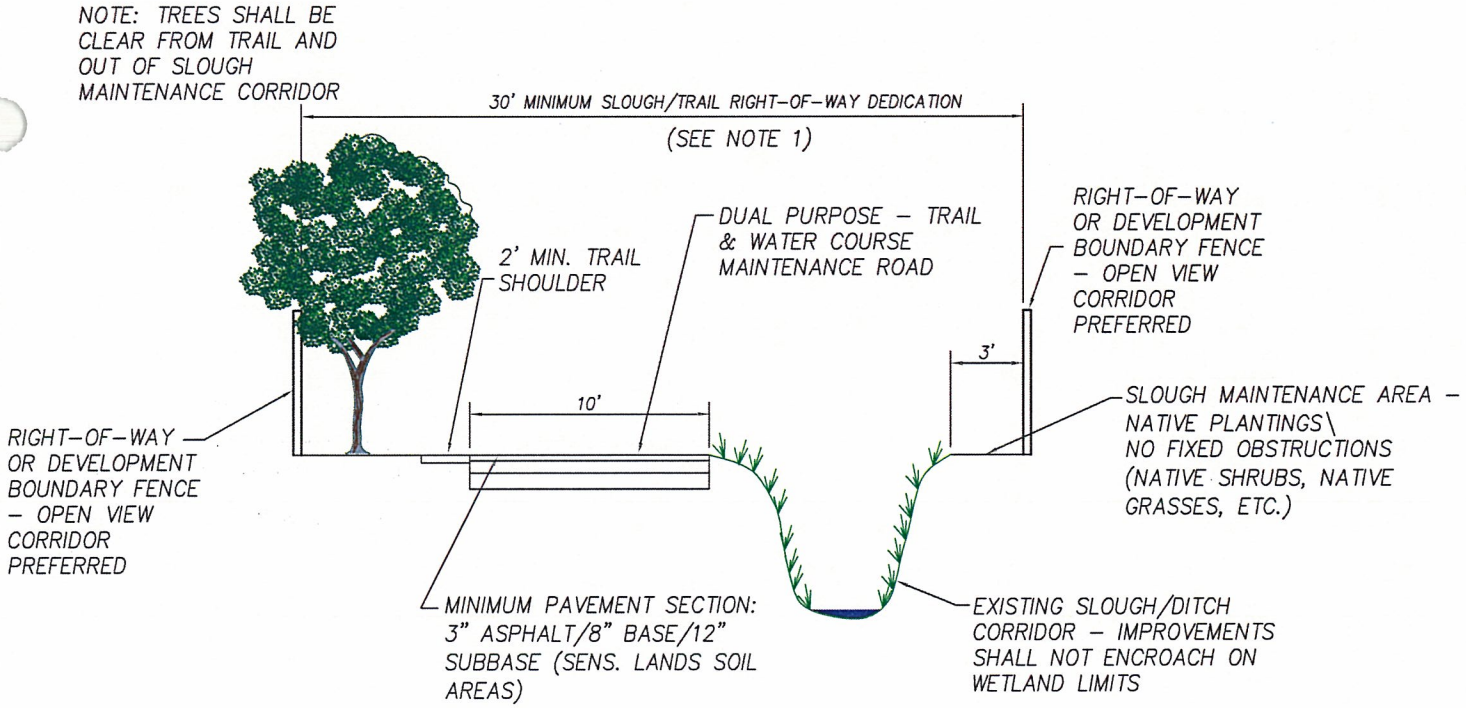

TRAIL CROSS-SECTION

NOTES:

1. MINIMUM SECTION IS SHOWN ONLY - RIGHT-OF-WAY MAY NEED TO EXPAND BASED UPON U.S.A.C.O.E. WETLAND DELINEATION LIMITS ALONG SLOUGH CORRIDORS.
2. TREES AND OTHER LANDSCAPE VEGETATION SHALL BE OF NATIVE VARIETIES REQUIRING NO IRRIGATION OTHER THAN PLANT ESTABLISHMENT PERIOD. PLANTINGS SHALL NOT OBSTRUCT WATER COURSE MAINTENANCE EQUIPMENT OPERATION.
3. PAVEMENT SECTION SHALL BE DESIGNED TO SUPPORT WATER COURSE MAINTENANCE TRUCK LOADING.

STD. DWG. #15.40E

AMERICAN FORK
— 1853 —

FILE: T:\LD-PROJECT\AF-CITY-STANDARDS\DWG\SLOUGH-TRAIL.DWG
DATE: NOVEMBER 16, 2010

MINIMUM STANDARDS FOR

REGIONAL TRAIL

EXHIBIT 'F'

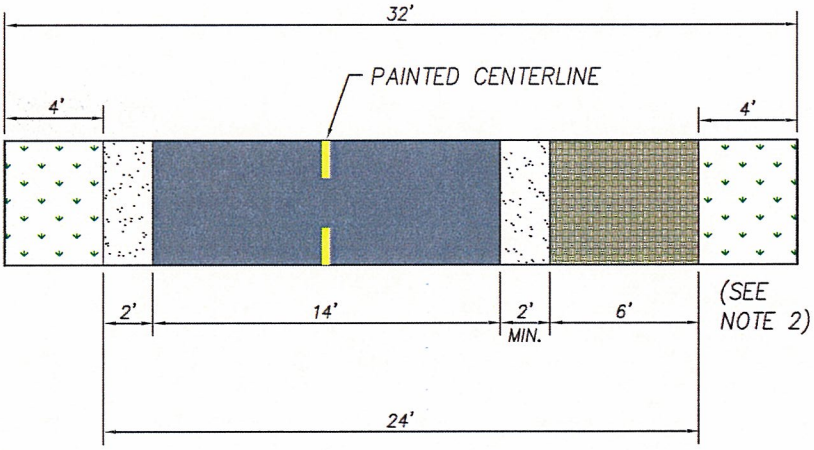

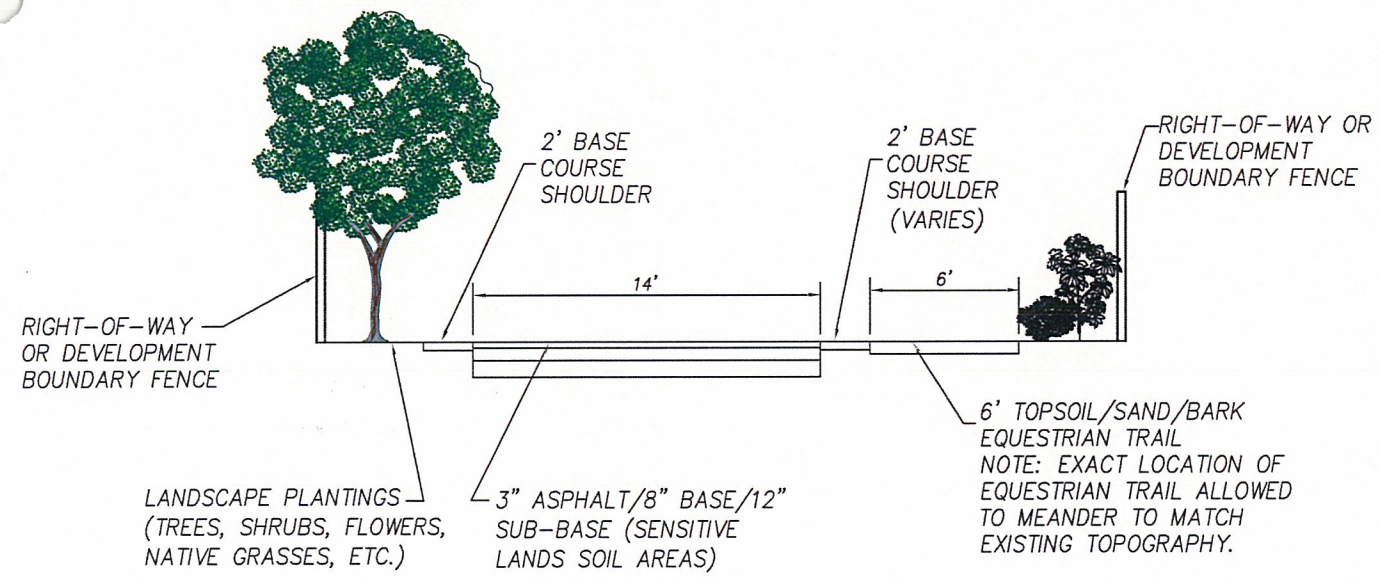

TRAIL CROSS-SECTION

NOTES:
1. ASPHALT TRAIL SECTION IN NON-SENSITIVE LANDS AREAS SHALL CONSIST OF 3-INCHES ASPHALT / 6-INCHES BASE COURSE.
2. TRAIL SECTION SHALL DRAIN WITH A 2% CROSS-SLOPE TO A DRAINAGE SWALE PLACED IN LANDSCAPE BOUNDARY AREA ON THE "LOW" SIDE OF TRAIL SECTION. EXACT LOCATION AND CONDITIONS TO DETERMINE "LOW" SIDE LOCATION.
3. TREE SELECTION PALETTE SHALL BE OF VARIETY WITH HIGH CANOPY TO ALLOW MAINTENANCE OF CLEARANCE FOR BIKES AND EQUESTRIAN TRAFFIC.

STD. DWG. #15.40F

AMERICAN FORK
1853

FILE: T:\LD-PROJECT\AF-CITY-STANDARDS\DWG\REGIONAL-TRAIL.DWG
DATE: NOVEMBER 16, 2010

MINIMUM STANDARDS FOR

NATIVE REGIONAL TRAIL

EXHIBIT 'G'

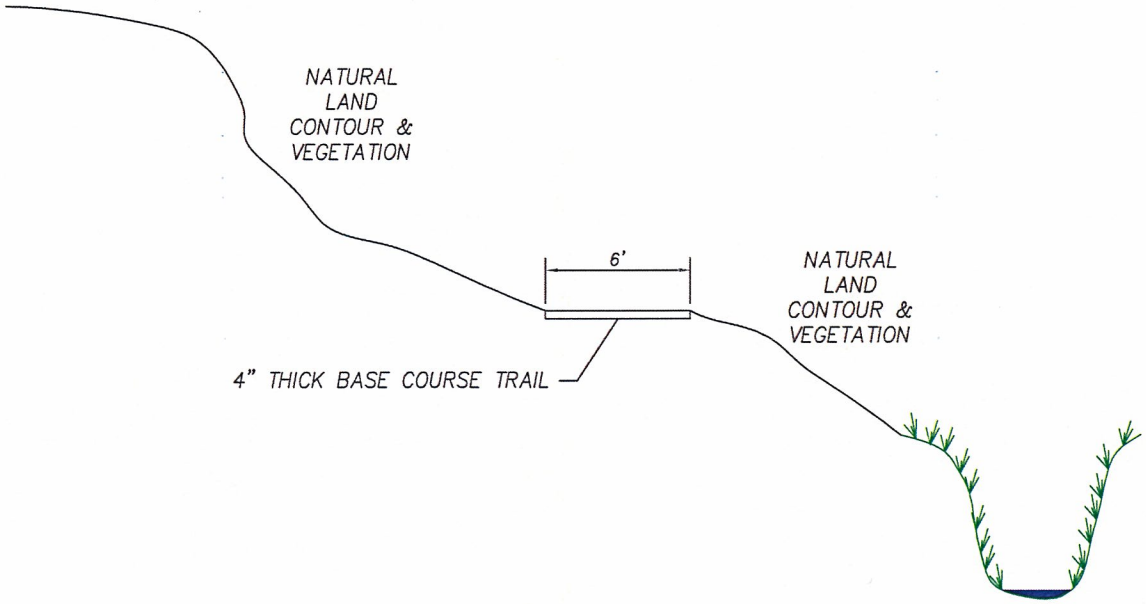

TRAIL CROSS-SECTION

STD. DWG. #15.40G

AMERICAN FORK
1853

FILE: T:\LD-PROJECT\AF-CITY-STANDARDS\DWG\NATIVE-TRAIL.DWG
DATE: NOVEMBER 16, 2010

MINIMUM STANDARDS FOR

M.A.G. REGIONAL TRAIL

EXHIBIT 'H'

REGIONAL TRAIL NOTES

1. CROSS-SECTIONS FOR REGIONAL TRAILS THAT INVOLVE MULTIPLE COMMUNITIES WHERE THE PRIMARY PLANNING AGENT IS THE MOUNTAINLAND ASSOCIATION OF GOVERNMENT (M.A.G.) SHALL CONFORM TO THE M.A.G. DESIGNATED CROSS-SECTION FOR THAT PROJECT. EXCEPTIONS TO THIS STANDARD MAY BE APPROVED BY THE CITY COUNCIL BASED UPON A FINDING THAT THE M.A.G. CROSS-SECTION IS TECHNICALLY INFEASIBLE FOR A GIVEN LOCATION. M.A.G. SHALL BE CONSULTED REGARDING ANY DEVIATION.
2. TRAILS IN THE AMERICAN FORK CITY TRAILS MASTER PLAN CONTAINING THIS DESIGNATION ARE:
   A. THE SOUTHERN RAIL TRAIL
   B. THE UTAH LAKE SHORELINE TRAIL.
3. WHERE NO OTHER INFORMATION IS AVAILABLE, DEVELOPMENT PARCELS SHALL DESIGNATE/DEDICATE A 30-FOOT TRAIL CORRIDOR FO THESE PURPOSES.

STD. DWG. #15.40H

AMERICAN FORK
1853

FILE: T:\LD-PROJECT\AF-CITY-STANDARDS\DWG\MAG-TRAIL.DWG
DATE: NOVEMBER 16, 2010

FIGURE 17.5.110-A

MINIMUM STANDARDS FOR

INTERSECTION SIGHT DISTANCE

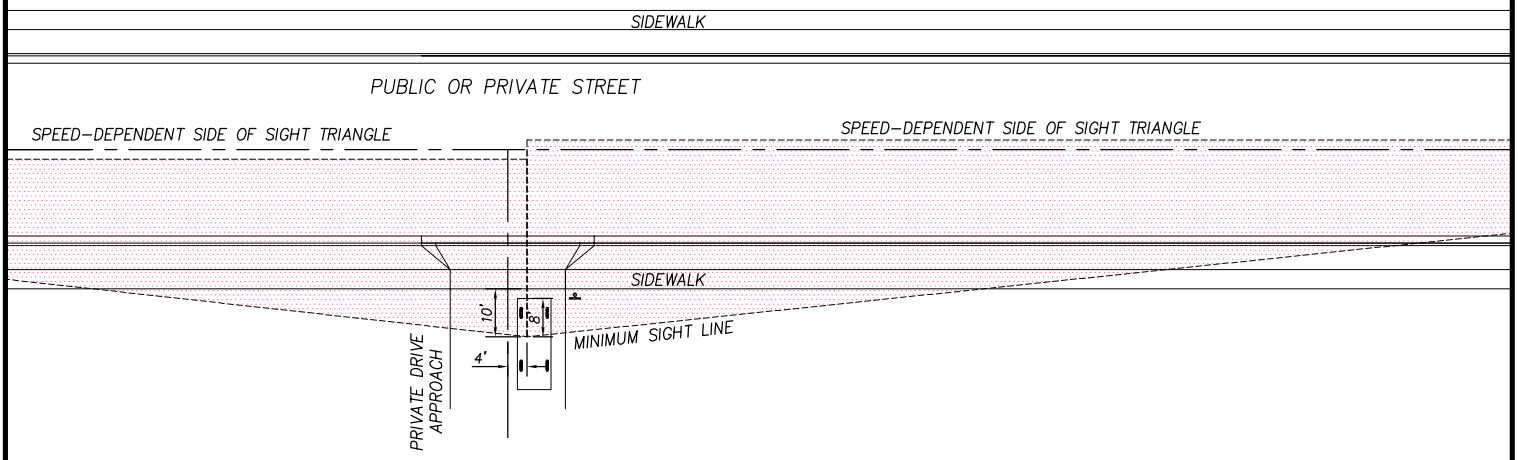

DRIVE APPROACH

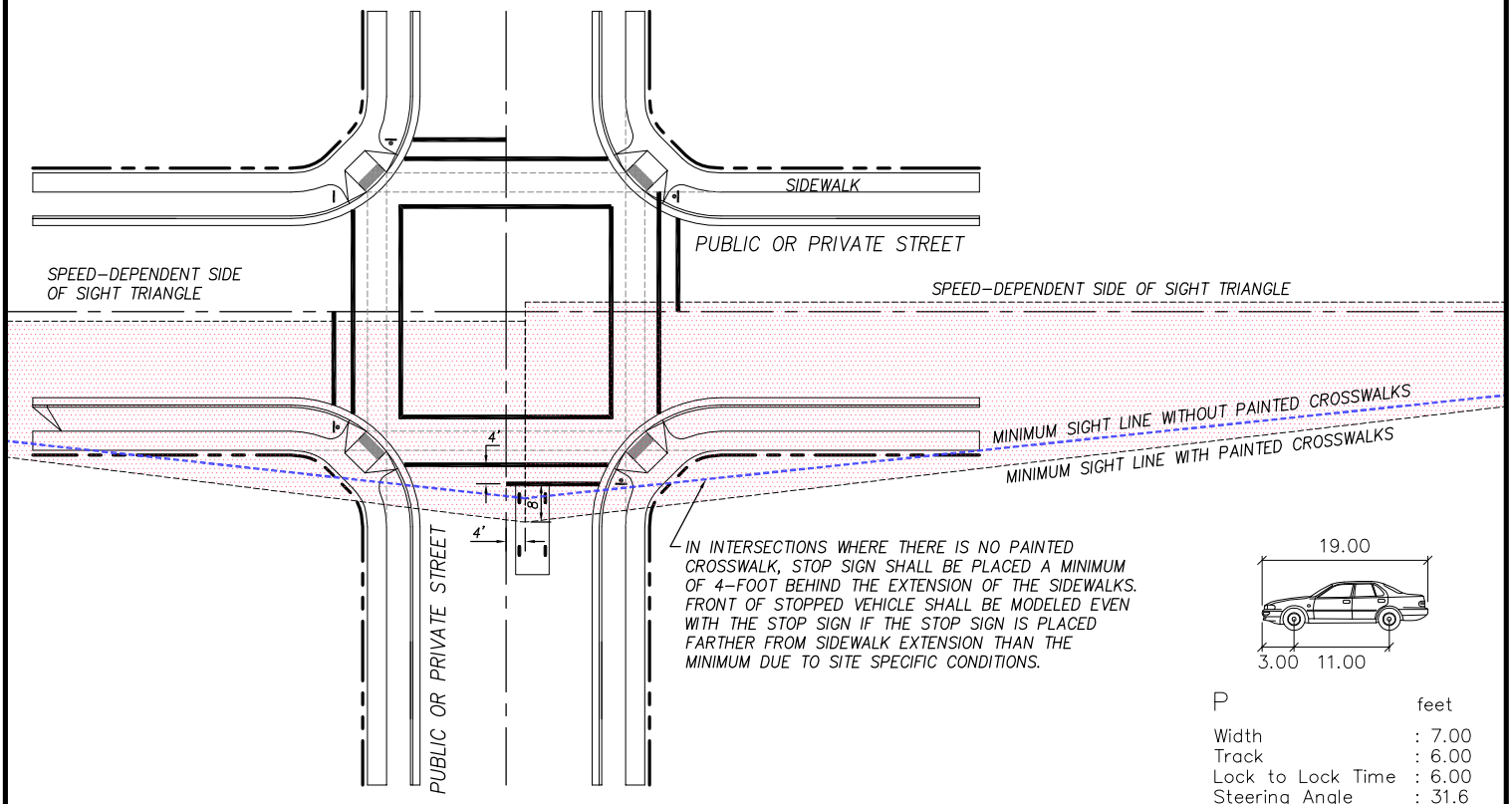

IN INTERSECTIONS WHERE THERE IS NO PAINTED CROSSWALK, STOP SIGN SHALL BE PLACED A MINIMUM OF 4–FOOT BEHIND THE EXTENSION OF THE SIDEWALKS. FRONT OF STOPPED VEHICLE SHALL BE MODELED EVEN WITH THE STOP SIGN IF THE STOP SIGN IS PLACED FARTHER FROM SIDEWALK EXTENSION THAN THE MINIMUM DUE TO SITE SPECIFIC CONDITIONS.

P	feet
Width	: 7.00
Track	: 6.00
Lock to Lock Time	: 6.00
Steering Angle	: 31.6

AASHTO PASSENGER CAR DIMENSIONS

ROADWAYS

GENERAL SHEET NOTES:

1. WAITING VEHICLE SHALL STOP OUTSIDE OF PEDESTRIAN FACILITIES AS DETAILED HEREON OR GREATER AS DETERMINED BY SPECIFIC SITE LAYOUT.
2. SEE AMERICAN FORK CITY ACCESS MANAGEMENT MANUAL AND THE LATEST VERSION OF THE AASHTO MANUAL A POLICY ON GEOMETRIC DESIGN OF HIGHWAYS AND STREETS FOR LENGTH OF SPEED–DEPENDENT SIDE OF SIGHT TRIANGLE.
3. SPEED–DEPENDENT SIDE OF SIGHT TRIANGLES SHALL BE CALCULATED BASED UPON DESIGN SPEED OF ROADWAY ALSO CONSIDERING EFFECTS OF ROADWAY GRADES FOR BOTH ROADWAYS.
4. NO OBSTRUCTION SHALL BE WITHIN THE SIGHT TRIANGLE IN THE AREA FROM 3–FOOT TO 8–FOOT (TRAFFIC SIGNS, NARROW STREET LIGHTS, NARROW TRUNK TREES WITH CANOPY ABOVE 8–FOOT EXCEPTED) OBSTRUCTIONS BELOW 3–FOOT ARE TO BE MINIMIZED.
5. DESIGNATED PARKING STALLS ARE NOT ALLOWED WITHIN SIGHT TRIANGLE AREAS.
6. DIMENSIONS SHOWN ARE MINIMUM. DESIGNER MAY OPT FOR MORE CONSERVATIVE SIGHT LINE DEFINITIONS
7. THIS DRAWING IS ALSO AVAILABLE AS STANDARD DRAWING #15.41

FILE: T:\LD–PROJECT\AF–CITY–STANDARDS\DWG\CITY–SIGHT–TRIANGLE–AASHTO–ADOPTED.DWG
DATE: FEBRUARY 28, 2012

STD. DWG. #15.41

AMERICAN FORK
— 1853 —

MINIMUM STANDARDS FOR

OFF-LINE OIL/WATER/SEDIMENT SEPARATOR

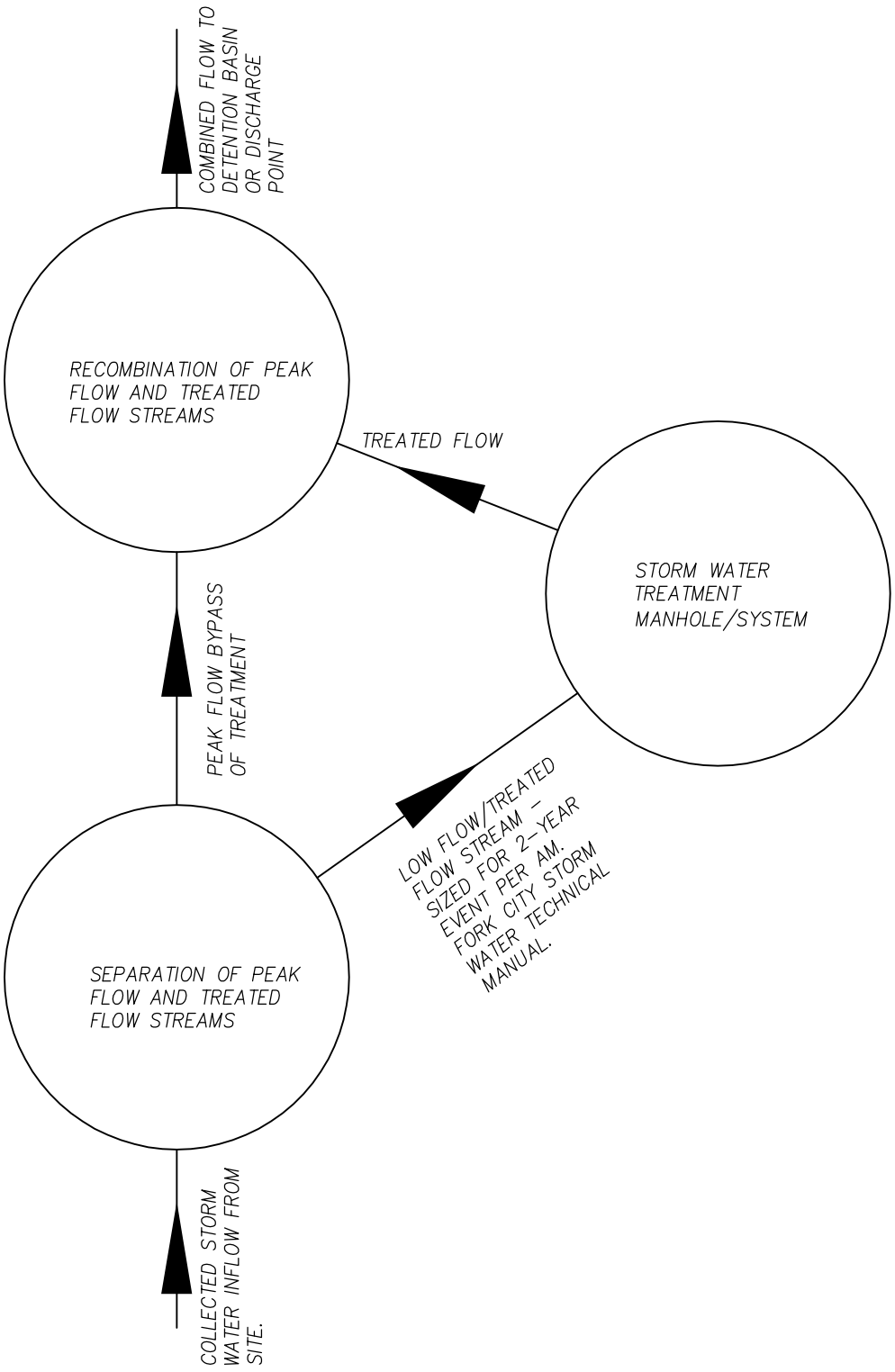

NOTES:

1. SEE AMERICAN FORK CITY STORM WATER TECHNICAL MANUAL FOR DETAILS OF DESIGN, CONSTRUCTION, AND TESTING REQUIREMENTS.
2. SPECIFIC TREATMENT SYSTEM FOR A GIVEN SITE TO BE DESIGNED BY REGISTERED PROFESSIONAL ENGINEER PERFORMING THE STORM DRAIN SYSTEM DESIGN FOR THE SITE OR APPLICATION.
3. CITY ENGINEER MAY ALLOW IN-LINE TREAMENT DEVICE IF PEAK FLOWS ARE ATTENUATED UPSTREAM AND NEVER ALLOWED TO REACH TREATMENT DEVICE.

STD. DWG. #15.42

AMERICAN FORK
— 1853 —

FILE: \Q: \LD-PROJECT\AF-CITY-STANDARDS\DWG\OFF-LINE-OWS.DWG
DATE: APRIL 17, 2012

SECTION 16

RECOMMENDED ACCESS MANAGEMENT REQUIREMENTS

That certain chapter denoted as chapter IV of the American Fork City Access Management Manual as prepared by Hales Engineering dated April 2012, said chapter therein denoted as "Recommended Access Management Requirements" is hereby adopted as chapter 16 of the DEVELOPMENT AND CONSTRUCTION STANDARDS OF AMERICAN FORK, UTAH, thereby incorporating the requirements into said standards as a part of the City standards, specifications, and requirements for design and construction.

IV. RECOMMENDED ACCESS MANAGEMENT REQUIREMENTS

A. Introduction

The following sections discuss recommended access management related standards for American Fork City. These recommendations are based on national and local research, as well as the current state-of-the-practice by other DOTs and municipalities as previously discussed. Following adoption of this manual, these standards will become Chapter 16 of "American Fork City Standards, Drawings & Specifications" as adopted in ordinance # 07-07-31 and subsequent updates.

B. Access Provisions

This section discusses what types of accesses should be permitted on the various types of roadways within American Fork. The roadway network and land use are interconnected, therefore allowing certain types of land use and accesses adjacent to certain types of roadways will lead to the correct type of access and mobility that would be expected for a certain type of road. Table 14 shows recommended allowable accesses for each roadway classification.

Table 14 Access Provisions

Street Classification	Commercial Access	Multi-Family Residential Access	Residential Access	Public Street Access
Arterial Street	Yes[1]	No[3]	No	Yes
Major Collector	Yes	Yes	No[5]	Yes
Minor Collector	Yes	Yes	Yes[4]	Yes
Local Street	No[2]	Yes	Yes	Yes

Notes:

1. Preferably, commercial access to an arterial should be consolidated for several parcels and gained using a traffic signal or a public street. Where direct access is given to an arterial, if possible, the access should be a RIRO access.
2. Exceptions to this recommendation would be for small commercial developments or for secondary access to a development.
3. Very large multi-family developments may have private accesses that resemble public streets in form and function, and therefore would be an exception to this recommendation.
4. Direct access and frontage of residential properties to a minor collector may result in less-than-desirable livability for residents and should be avoided where practical.
5. Direct access and frontage of residential properties to a major collector may result in less-than-desirable livability for residents and should be avoided where practical; however, if base residential zoning allows access, then a traffic impact study showing acceptable operations and safety can be mitigated, then an engineering review will determine the applicability of this standard.

Source: Hales Engineering

Recommendations listed in Table 14 may not always be feasible depending on whether or not other access exists for a given parcel of land. The feasibility of these recommendations is also highly dependent upon land use and transportation planning for American Fork City.

C. Intersection and Access Spacing

Based on recommendations from the literature and from state-of-the-practice of other municipalities and DOTs, recommendations for minimum signalized, public street and private access spacing have been compiled and are shown in Table 15.

Table 15 Access Management Spacing Recommendations

Street Classification	Minimum Signal Spacing (feet)[1]	Minimum Street Spacing (feet)[1, 4]	Minimum Commercial Access Spacing (feet)[1, 4]	Minimum Residential Access Spacing (feet)[1]
Arterial Street	2,640	660	330[2]	n/a[3]
Major Collector	1,320	660	330	n/a[3]
Minor Collector	1,320	330	150	150
Local Street	1,320	150	150	50

Notes:

1. Measured center-line to center-line
2. Access to an arterial should only be granted when other reasonable access is not available to a collector or local street. If granted, the access should be limited to right-in/right-out only if possible.
3. Residential access should not be granted on arterials or major collectors.
4. Minimum Street Spacing refers to unsignalized intersection spacing; if a traffic signal is present a traffic impact study should determine if the minimum street spacing should be longer.

Source: Hales Engineering

D. Corner Clearance Requirements

The corner clearance requirements are the same as the minimum access spacing requirements as were shown previously in Table 15. In general, minimum corner clearance can be shorter on the downstream leg of the minor street at an intersection, especially if the access is s RIRO access. This distance can be as low as 120 feet. For all other corner clearance distances, the values in Table 15 for minimum access spacing apply.

E. Cross Access (Shared Access) Requirements

Access to private property from the public transportation network cannot be prohibited. However, when parcels have small frontages, especially along major collectors and arterials, it is highly recommended that the cross access and/or shared access be utilized where practical. Where adjoining parcels have the same ownership, American Fork City should require the use of cross or shared access in order to maintain the recommended access spacing requirements as previously discussed. When adjacent parcels do not have common ownership, incentives should be provided to promote shared and cross access.

F. Intersection Alignment / Offsets

Where possible, accesses on opposite sides of the street should be lined up directly across from each other. Sometimes this is not possible due to site restrictions or property lines. If accesses cannot be lined up across from one another, the preferable offset is so that left turns entering each respective access do not overlap, as was discussed previously in this document and shown in Figure 5. Table 16 shows the minimum offset for intersections on opposite sides of the street when the potential for overlap does occur. However, a traffic impact study may determine that a larger offset is required depending on the level of queuing that may occur at the intersections.

Table 16 Minimum Access Offset Requirements

Street Classification	Minimum Offset (feet)[1]
Arterial Street[2]	310
Major Collector	180
Minor Collector	120
Local Street	n/a

Notes:

1. These values are a minimum requirement and are subject to change based on the results of a traffic impact study.
2. Offset requirements are not applicable in the case of RIRO accesses such as when a raised median is present. Access should only be provided to arterial streets when reasonable alternative access is does not exist.

Source: Hales Engineering

G. On-Street Parking

Permitting on-street parking can be a tool to make a corridor more pedestrian friendly as parked vehicles provide a buffer between through traffic and pedestrians on the sidewalks. Vehicles

parking and un-parking along a roadway may cause side friction that can result in through traffic being slowed down or impeded. To determine whether or not a road should have permitted on-street parking depends primarily on what the function of the roadway is. As was discussed previously, the purpose of most arterial type roads is to provide mobility, not access, whereas the purpose of a local street is to provide access and not mobility. However, another important factor is adjacent land use. A roadway in a core business area, even if classified as an arterial, can benefit from having on-street parking, where a lower classified road, such as a minor collector within an industrial area, may not need on-street parking, therefore the cost to build and maintain this type of road will be less expensive by prohibiting on-street parking. Finally, the available cross section width should also be considered when determining whether on-street parking should be permitted. A minimum of seven feet of cross section width should be provided for on-street parking. Table 17 shows recommended on-street parking provisions based on functional classification. Figure 15 shows on-street parking on Main Street in American Fork. Although this road is classified as an arterial, the adjacent land use supports on-street parking. All parking within American Fork City should be parallel except for Church Street, Center Street and Merchant Street between Main Street and Pacific Drive and Main Street from 200 East to 460 East.

Table 17 On-Street Parking Recommendations

Street Classification	On-Street Parking Permitted[1]
Arterial Street	No
Major Collector	Yes
Minor Collector	Yes
Local Street	Yes

Notes:

1. These recommendations are based primarily on the function of the roadway. Adjacent land use and available cross section width are also important factors in determining whether on-street parking should be permitted.

Source: Hales Engineering

Figure 15 On-street parking is currently permitted on Main Street because of the adjacent land use and the available cross section width (Source: Hales Engineering).

H. Access Characteristics

Recommendations for access characteristics discussed in this section include the following:

- Driveway width
- Curb return radii
- Vertical profile of driveway
- Driveway throat length
- Minimum separation of gate on private access from public street

All recommendations in this section assume the following:

- The design vehicle for residential and commercial accesses is a passenger car
- The design vehicle for industrial accesses is a WB-50, with the exception of the North Pointe Business Park including the Price property, which will be designated by the City Engineer based on the type of anticipated vehicle usage.

Although some larger vehicles such as delivery vehicles do need access to commercial areas, these types of trips do not typically occur during the peak periods of the day. The entire access (ingress and egress side) can therefore be used by a larger vehicle during off-peak times. This is more efficient than utilizing more area to make larger radii and access widths and is also more ideal for pedestrians. Access driveways that will be heavily utilized by trucks and busses during peak periods should be designed to the industrial recommendations.

Table 18 shows driveway widths and curb radii for various intersection types depending on the functional classification of the adjacent roadway.

Table 18 Driveway Widths and Curb Return Radii

Access Type	Total Driveway Widths & (Ingress Lane Width) in Feet				Curb Return Radii in Feet			
	Arterial	Major Collector	Minor Collector	Local	Arterial	Major Collector	Minor Collector	Local
Residential (SFDU) 1 dwelling unit	n/a	n/a	12 (n/a[1])	12 (n/a[1])	n/a	n/a	n/a[2]	n/a[2]
Multi-Family (less than 3 units)	n/a	18 (n/a[1])	18 (n/a[1])	18 (n/a[1])	n/a	n/a[2]	n/a[2]	n/a[2]
Multi Family (more than 3 units)	26 (n/a[1])	26 (n/a[1])	26 (n/a[1])	26 (n/a[1])	20	20	20	25
Commercial (1 exit lane)	26 (14)	26 (14)	26 (14)	26 (14)	20	20	20	25
Commercial (2 exit lanes)	40 (16)	40 (16)	n/a	n/a	20	25	n/a	n/a
Industrial	36 (22)	36 (22)	36 (22)	n/a	45	45	45	n/a

Notes:

1. This type of access is not striped.
2. This type of access is a "dustpan" style access; therefore, no curb-return radius applies.

Source: Hales Engineering & *Transportation and Land Development* (ITE, 2002)

Table 19 shows the required curb radius measured from top back of curb (TBC) for the various street intersections within American Fork City. Deviation from these standards requires approval in writing from the City Engineer.

Table 19 City Street Curb Radii (feet)

Right-of-Way Width (feet)	Right-of-Way Width (feet)			
	60	**66**	**82**	**96**
60	25	25	30	30
66	25	30	35	35
82	30	35	45	45
96	30	35	45	45

Notes:

1. All measurements are in feet.
2. Based on currently adopted American Fork City standards.

Source: Hales Engineering

Table 20 contains maximum change in grade between the cross-slope of the roadway and the slope of the driveway. The maximum change in grade reported is the algebraic difference in slope. For example, if a negative 2 percent cross-slope connects to a positive 2 percent driveway slope, the algebraic change in grade is 4 percent. Likewise, if the cross-slope is negative 2 percent and the driveway slope is negative 6 percent, the algebraic change in grade is also 4 percent. Table 19 also shows the maximum change in grade where no vertical curves are required (rounding only) as well as the maximum change in grade with vertical curves provided.

Table 21 shows the recommended driveway throat lengths for various access types and based on what type of conflict is closest to the adjacent road. When an internal intersection will be the first conflict encountered when entering a driveway, a shorter throat is typically needed then for a site where the driver will encounter parking spots after entering the access.

Table 22 shows the minimum separation of a gate on a private access from the edge of traveled way for various design vehicles. This separation is necessary so that a vehicle can park in front of the gate while it is still closed without the rear of the vehicle obstructing the flow of traffic. Where the possibility of queuing exists, such as at a gated residential community, a traffic study should be completed to determine the 95th percentile queue length during the peak hour.

Table 20 Change in Driveway Vertical Profile

Access Type	Maximum Change in Grade – No Vertical Curve Required[1]				Maximum Change in Grade – Vertical Curve Required			
	Arterial	Major Collector	Minor Collector	Local	Arterial	Major Collector	Minor Collector	Local
Residential (SFDU)	n/a	n/a	8%	10%	n/a	n/a	10%	12%
Multi-Family (3 or less units)	n/a	8%	8%	10%	n/a	10%	10%	12%
Multi Family (4 or more units)	4%	7%	8%	10%	5%	7%	10%	12%
Commercial (1 exit lane)	4%	7%	8%	10%	6%	7%	10%	12%
Commercial (2 exit lanes)	4%	7%	n/a	n/a	5%	7%	n/a	n/a
Industrial	4%			n/a	5%			n/a

Notes:

1. Rounding by taking care to avoid abrupt change in grade.

Source: Hales Engineering & *Transportation and Land Development* (ITE, 2002)

Table 21 Recommended Driveway Throat Length (feet)

Access Type	First conflict within the site is:	
	Parking	Internal Intersection
Residential (SFDU)	n/a	n/a
Multi-Family (3 or less units)	n/a	n/a
Multi Family (4 or more units)	75	30
Commercial (1 exit lane)	75	30
Commercial (2 exit lanes)[1]	75	50
Industrial	75	75

Notes:

1. For signalized accesses with three egress lanes, throat length should be at least 200 feet long. For signalized accesses with four egress lanes, throat length should be at least 300 feet long. These lengths should also be verified by a traffic study.

Source: Hales Engineering & *Transportation and Land Development* (ITE, 2002)

Table 22 Minimum Setback of a Gate on a Private Access from a Private Street

Design Vehicle	Minimum Distance (feet)[1]
Passenger Car	25
Single Unit Truck	35
Bus	50
Recreational Vehicle	35
Recreational Vehicle Pulling a Trailer	60
WB-40	50
WB-50	60
WB-62	75
WB-67	80

Notes:

1. Measured form the edge of the sidewalk to the gate. Traffic study required if multiple vehicles are expected to use the gate.
2. For a gate controlled access from a public street an SU design vehicle should be able to complete a three-point turn within the throat, see St. Dwg. #15.38A.

Source: Hales Engineering & *AASHTO Greenbook* (2004)

I. Intersection Sight Distance

This section discusses recommended intersection sight distance for several intersection types and is based on *AASHTO Greenbook* (2004) recommendations. These recommendations are made for various intersection control scenarios as well as functional classifications of the intersecting roads. Additionally, sight distances to accommodate trucks have also been calculated. Scenarios discussed in the following sections include intersection sight distance for a full access stop-controlled intersection, a RIRO access, a yield-control intersection (four-leg and three-leg intersection), and an uncontrolled intersection. Sight distance requirements for a left turn from a major street onto a minor street are also given within the provided tables for illustrative purposes. All intersection sight distances should be calculated by a licensed traffic engineer and compared to the tables within this manual.

For all of the scenarios, the following assumptions have been made:

- Design Speeds:
  - Access: 15 mph
  - Local: 30 mph
  - Minor Collector: 35 mph
  - Major Collector: 40 mph
  - Arterial: 50 mph
- Intersections are flat (all slopes are assumed 3 percent or less)
- Cross Sections:
  - Local: 2 lanes
  - Minor Collector: 2 lanes
  - Major Collector: 3 lanes
  - Arterial: 5 lanes
- All calculations are based on *AASHTO Greenbook* (2004) assumptions

Because the grade of the major or minor street does affect sight distance, the values presented in the sections below should be adjusted when grades are more than 3 percent. These adjustments should be made on an individual case-case basis by consulting the *AASHTO Greenbook*. Additionally, alternative design speeds or cross sections will also require adjustments to these sight distances.

Once intersection sight distances have been determined for a given intersection, a “clear sight triangle” can be formed which should remain clear of anything that will obstruct the driver from seeing other vehicles within the intersection sight distance. The AASHTO Greenbook states that the minimum height of a driver’s eye is approximately 3.5 feet. The maximum height (which corresponds to the driver of a combination or single unit truck) is approximately 7.6 feet. Therefore, objects should not be placed in the clear sight triangle between 3.5 and 7.6 feet in

height. Objects such as buildings, fences, and parked cars are examples of objects that will block the intersection sight distance. Landscaping features such as shrubbery and decorative rocks are acceptable as long as they are less than 3.5 feet high. Trees are acceptable as long as the stump is located outside of the clear sight triangle and the lowest branches are at least 7.6 feet tall. These height standards apply to areas with flat grade. Intersections near slopes must be evaluated on a case-by-case basis.

a. Stop-Controlled Intersections

Intersection site distances for stop-controlled intersections include full movement intersections where the minor street is stop-controlled, but the major street does not stop. RIRO intersection sight distance is also presented. Table 23 shows the sight distance required for full-movement intersections. Table 24 shows the sight distance required for RIRO intersections. In both cases, the sight triangle for the minor leg should be 20 feet back from the edge of traveled way of the major street. The value shown in the table is how far to the left and right for which the stopped vehicle should have a clear sight triangle. Figure 16 illustrates these distances and the sight triangle.

Table 23 Intersection Sight Distance – Two-Way Stop-Controlled Full-Movement Intersection (feet)

Design Vehicle	Major Street			
	Local[1]	Minor Collector[2]	Major Collector[3]	Arterial[4]
Passenger Car	335	390	470	625
Single Unit Truck	420	490	600	805
Combination Truck	510	595	720	950

Notes:

1. Design Speed: 30 mph, 2-lane cross section.
2. Design Speed: 35 mph, 2-lane cross section.
3. Design Speed: 40 mph, 3-lane cross section.
4. Design Speed: 50 mph, 5-lane cross section.

Source: AASHTO Greenbook (2004) Case B1 (pp. 657-663)

Table 24 Intersection Sight Distance – Stop-Controlled RIRO Access (feet)				
	Major Street			
Design Vehicle	Local[1]	Minor Collector[2]	Major Collector[3]	Arterial[4]
Passenger Car	290	335	385	480
Single Unit Truck	375	440	500	625
Combination Truck	465	545	620	775

Notes:

1. Design Speed: 30 mph, 2-lane cross section.
2. Design Speed: 35 mph, 2-lane cross section.
3. Design Speed: 40 mph, 3-lane cross section.
4. Design Speed: 50 mph, 5-lane cross section.

Source: AASHTO Greenbook (2004) Case B2 (pp. 663-666)

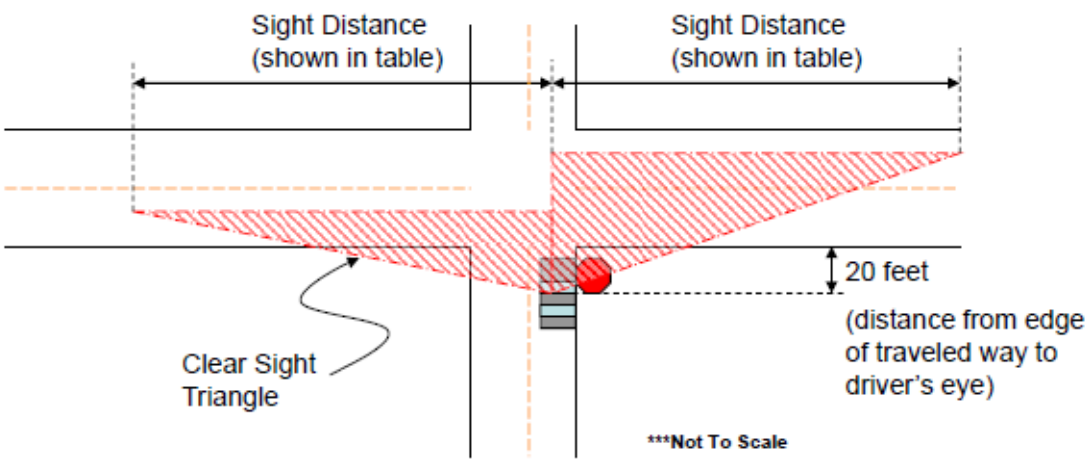

Figure 16 Intersection sight triangles for stop-controlled minor approaches (Source: Hales Engineering based on *AASHTO Greenbook* (2004) with modification by American Fork City for additional safety considerations).

b. Yield-Controlled Intersections

Intersection site distances for yield-controlled intersections include four-leg intersections where both minor street approaches are yield control as well as three-leg intersections where the

minor street is yield-controlled. In both scenarios, the major street does not stop. Other combinations of yield approaches must be evaluated on a case-by-case basis. Table 25 shows the sight distance required at four-way intersections with minor-street yield control. Table 26 shows the sight distance required at T-intersections with one yield-controlled leg. For the T-intersection scenario (Table 26), the site distance on the minor street is measured 82 feet back from the traveled way of the minor street approach. Figure 17 and Figure 18 illustrate these distances and the sight triangles for four-way and T-intersections, respectively. Sight distance values were only calculated for passenger cars as it is assumed that roads with significant truck traffic will not be yield-controlled intersections. Also, it was assumed that the major streets do not have classifications higher than minor collector, as these types of high classification streets should at least have stop control on the minor street.

Table 25 Intersection Sight Distance – Four-Way Intersection with Minor Street Yield Control (feet)

	Minor Street	**Major Street**	
		Local[1]	Minor Collector[2]
Minor Street Leg	Access[3]	75	75
	Local[1]	160	160
Major Street Leg	Access[3]	300	345
	Local[1]	290	335

Notes:

1. Design Speed: 30 mph, 2-lane cross section.
2. Design Speed: 35 mph, 2-lane cross section.
3. Design Speed: 15 mph, 2-lane cross section.

Source: AASHTO Greenbook (2004) Case C1 (pp. 666-670)

Table 26 Intersection Sight Distance – Three-Way Intersection with Minor Street Yield Control (feet)			
	Minor Street	**Major Street**	
		Local[1]	Minor Collector[2]
Minor Street Leg	Access[3]	82	82
	Local[1]	82	82
Major Street Leg	Access[3]	355	415
	Local[1]	355	415

Notes:

1. Design Speed: 30 mph, 2-lane cross section.
2. Design Speed: 35 mph, 2-lane cross section.
3. Design Speed: 15 mph, 2-lane cross section.

Source: AASHTO Greenbook (2004) Case C2 (pp. 671-672)

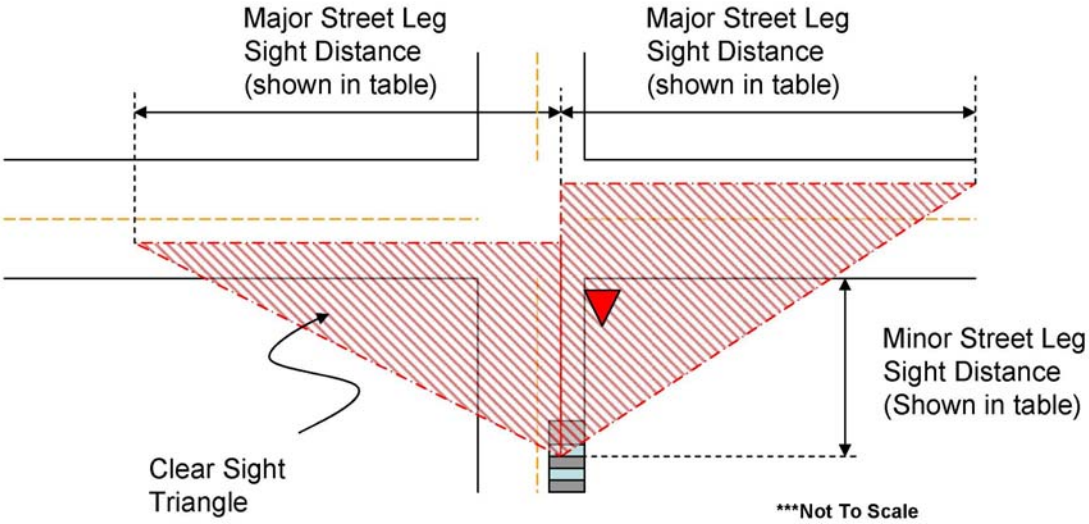

Figure 17 Intersection sight triangles for four-way intersections with yield control on the minor street approach (Source: Hales Engineering based on *AASHTO Greenbook* (2004)).

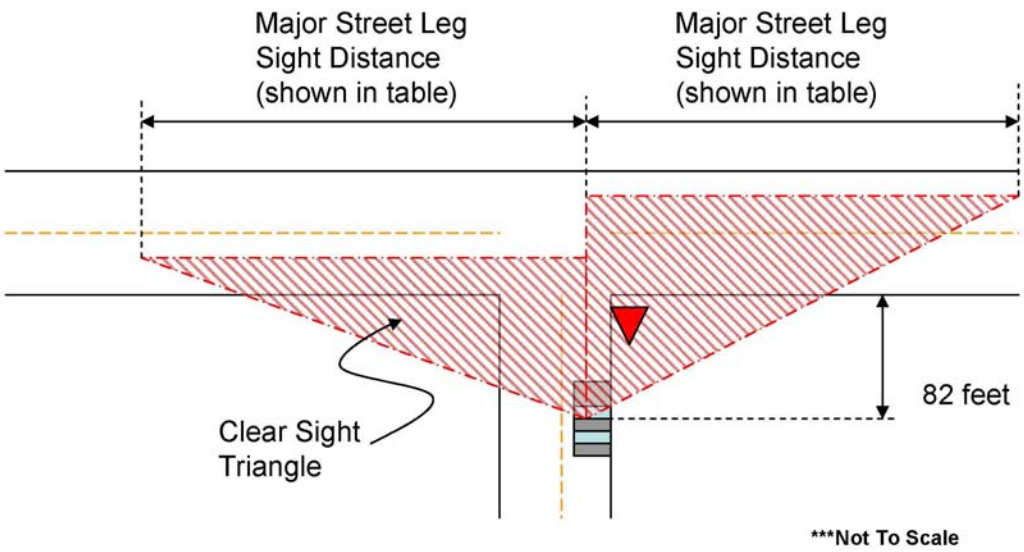

Figure 18 Intersection sight triangles for three-way intersections with yield control on the minor street approach (Source: Hales Engineering based on *AASHTO Greenbook* (2004)).

c. Uncontrolled Intersections

Uncontrolled intersection site distances are for those intersections where neither the minor nor the major street has any control. These streets are typically very low volume roads primarily in residential subdivisions. Table 27 shows the sight distance required at uncontrolled intersections. Only access roads and local streets were shown as any other higher classification road should have some intersection control. The distance shown in the table corresponds to the site leg of the site distance triangle for the respective type of road. Figure 19 illustrates the site distance triangle for this type of intersection. Sight distance values were only calculated for passenger cars as it is assumed that roads with significant truck traffic will not be yield-controlled intersections.

Table 27 Intersection Sight Distance – Uncontrolled Intersection (feet)

	Access[1]	Local[2]
Distance of Approach Leg	70	140

Notes:

1. Design Speed: 15 mph, 2-lane cross section.
2. Design Speed: 30 mph, 2-lane cross section.

Source: AASHTO Greenbook (2004) Case A (pp. 654-657)

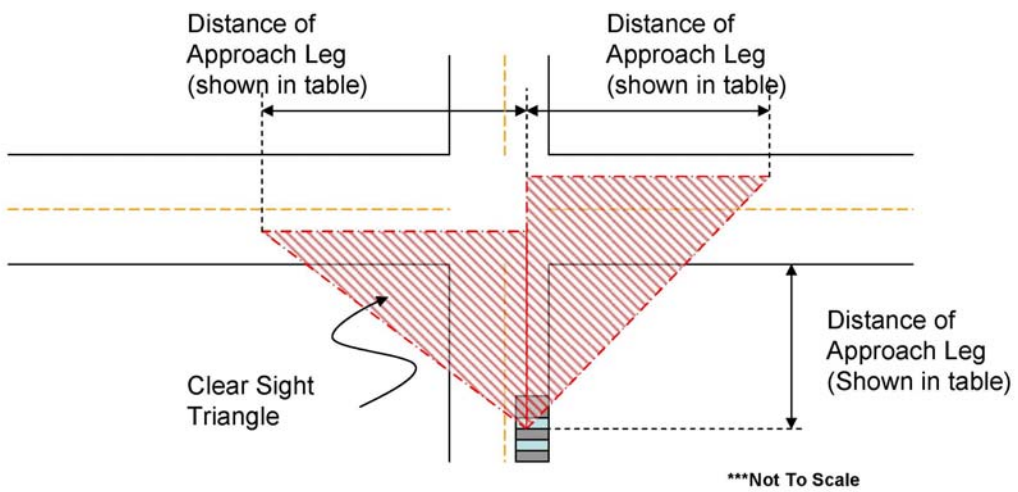

Figure 19 Intersection sight triangles for uncontrolled intersections (Source: Hales Engineering based on *AASHTO Greenbook* (2004)).

d. Left Turns from the Major Road

Intersection sight distance for left turns from the major road include any left turn movement where the driver must yield to oncoming traffic (through and right turning vehicles) before turning left onto the minor street. Table 28 shows the values for the sight distance triangles based as a function of design vehicle. Figure 20 illustrates the sight distance triangles for this type of movement.

Table 28 Intersection Sight Distance – Left Turns from Major Street (feet)

Design Vehicle	Major Street			
	Local[1]	Minor Collector[2]	Major Collector[3]	Arterial[4]
Passenger Car	245	285	325	445
Single Unit Truck	290	335	385	530
Combination Truck	335	390	445	605

Notes:

1. Design Speed: 30 mph, 2-lane cross section.
2. Design Speed: 35 mph, 2-lane cross section.
3. Design Speed: 40 mph, 3-lane cross section.
4. Design Speed: 50 mph, 5-lane cross section

Source: AASHTO Greenbook (2004) Case F (pp. 674-676)

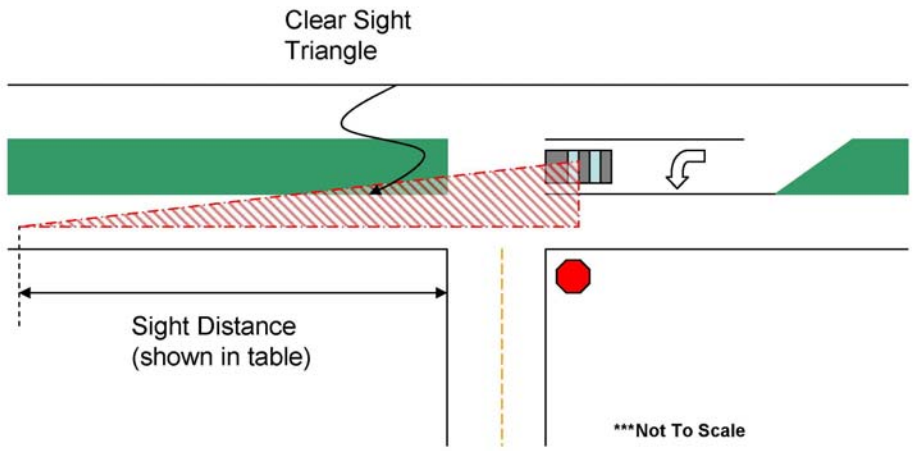

Figure 20 Intersection sight triangle for a left turn from the major street onto the minor street (Source: Hales Engineering based on *AASHTO Greenbook* (2004)).

J. Intersection Lighting

Table 29 shows recommendations for intersection lighting in American Fork City based on the type of intersection and/or access.

Table 29 Intersection Lighting Recommendations

Minor Street	Major Street			
	Arterial Street	Major Collector	Minor Collector	Local Street
Arterial Street	Yes			
Major Collector	Yes	Yes		
Minor Collector	Yes	Yes	Yes	
Local Street	Yes	Yes	Yes	Yes
Commercial Access[1]	Yes	Yes	Yes	Yes[2]
Residential Access	n/a	No	No	No

Notes:

1. For purposes of these recommendations, commercial accesses also include multi-family developments.
2. However, if this affects the project or the local subdivision negatively, then and appeals process can be initiated.

Source: Hales Engineering

In addition to intersection lighting, street lighting should also be provided, especially when roads are curved, or other design features make safely traveling the road at night more difficult without lighting. The type and frequency of lighting should be based on the context of the street including adjacent land use, architectural styles, and pedestrian usage. Making general recommendations for street lighting is beyond the scope of an access management plan. However, for reference in commercial areas street lights should be installed at 150-foot intervals on opposite sides of the road and in residential areas at 300-foot intervals on opposite sides of the road. Street lights should be installed at corners with at least one on every block. Mid-block street lighting is required if block lengths exceed 500-feet. Street lights should be installed on opposite corner from stop signs unless otherwise determined by the City Engineer. Figure 21 shows street lighting in a portion of the downtown core area that adds to the character of the street because of its aesthetics and pedestrian scale.

Figure 21 Street lighting such as this add to the character of the street and adds more to pedestrian safety than to traffic operations (Source Hales Engineering).

K. Level of Service Standard

American Fork City has determined that in order to provide desired operational characteristics and safety at new intersections, they should operate at an LOS C or better condition for new projects / areas within the City, and development / redevelopment projects in built-out areas of the City should maintain an LOS D or better.